LSP

Surge Protective Device

Catalogue

Reliability in Surge Protection

Content

AC Surge Protective Device

DC Surge Protective Device

PV Surge Protective Device

Wind Turbines Surge Protector

Telecom and Data Surge Protector

PCB Mounting Surge Protector

LED Surge Protection Module

AC Surge Protective Device

FLP25-xxx/1(S)

Class I • Type 1

Location of Use: Main Distribution Boards
Network Systems: TN-S, TN-C, TT(only L-N)
Mode of Protection: L-PE, N-PE (only TN-S), L-PEN, L-N
Surge Ratings: I_{imp} = 25 kA (10/350 µs)
I_n = 25 kA (8/20 µs)
IEC/EN Category: Class I / Type 1
Protective Elements: High Energy MOV
Housing: Monobloc Design
Compliance: IEC 61643-11:2011
EN 61643-11:2012

Technical Data

FLP25-xxx/1(S)		150	275	320	385	440
IEC Electrical						
Nominal AC Voltage (50/60 Hz)	U_o / U_n	120 V	230 V	230 V	230 V	400 V
Maximum Continuous Operating Voltage (AC)	U_C	150 V	275 V	320 V	385 V	440 V
Nominal Discharge Current (8/20 µs)	I_n			25 kA		
Maximum Discharge Current (8/20 µs)	I_{max}			100 kA		
Impulse Discharge Current (10/350 µs)	I_{imp}			25 kA		
Specific Energy	W/R			156 kJ/Ω		
Charge	Q			12,5 As		
Voltage Protection Level	U_p	1000 V	1500 V	1600 V	1800 V	2000 V
Response Time	t_A			< 25 ns		
Max. Backup Fuse				315 A gL / gG		
Short-Circuit Current Rating (AC)	I_{SCCR}			50 kA		
TOV Withstand 5 s	U_T	180 V	335 V	335 V	335 V	580 V
TOV 120 min	U_T	230 V	440 V	440 V	440 V	765 V
Number of Ports				1		
Mechanical & Environmental						
Operating Temperature Range	T_a			-40 ºF to +158 ºF [-40 ºC to +70 ºC]		
Permissible Operating Humidity	RH			5% to 95%		
Atmospheric Pressure and Altitude				80 kPa to 106 kPa / -500 m to 2000 m		
Terminal Screw Torque	M_{max}			39.9 lbf·in [4.5 Nm]		
Conductor Cross Section (max.)				2 AWG (Solid, Stranded) / 4 AWG (Flexible)		
				35 mm² (Solid, Stranded) / 25 mm² (Flexible)		
Mounting				35 mm DIN Rail, EN 60715		
Degree of Protection				IP20 (built-in)		
Housing Material				Thermoplastic: Extinguishing Degree UL 94 V-0		
Thermal Protection				Yes		
Operating State / Fault Indication				White ok / Red defect		
Remote Contacts (RC)				Optional		
RC Switching Capacity				AC: 250 V / 0.5 A; DC: 250 V / 0.1 A; 125 V / 0.2 A; 75 V / 0.5 A		
RC Conductor Cross Section (max.)				16 AWG (Solid) / 1.5 mm² (Solid)		
Order Information						
Ordering Code		150	275	320	385	440
FLP25-xxx/1		2515011	2527511	2532011	2538511	2544011
FLP25-xxx/1S (with remote contacts)		2515012	2527512	2532012	2538512	2544012

Internal Configuration

Legend

- L Line Conductor Terminal
- N Neutral Conductor Terminal
- ⏚ PE/G Conductor Terminal
- S Signalling Contacts Optional

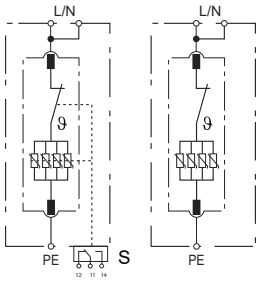

Dimensions & Packaging

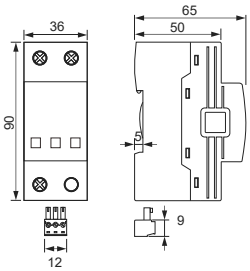

[mm]

Complete Unit					
FLP25-xxx/1(S)	150	275	320	385	440
DIN 43880 Dimension	1 CTN				
Packaging Dimensions (H x W x L)	[240 × 220 × 330 mm]				
Standard Order Quantity	42 Units				

Connection Diagram

TN-S, TN-C, TT(Single-phase, 1+0)

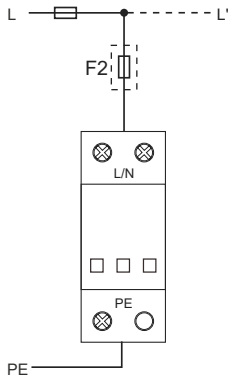

AC Surge Protective Device

FLP25-xxx/2(S)

Class I • Type 1

Location of Use:	Main Distribution Boards
Network Systems:	TN-S
Mode of Protection:	L-PE, N-PE
Surge Ratings:	I_{imp} = 25 kA (10/350 µs) I_n = 25 kA (8/20 µs)
IEC/EN Category:	Class I / Type 1
Protective Elements:	High Energy MOV
Housing:	Monobloc Design
Compliance:	IEC 61643-11:2011 EN 61643-11:2012

Technical Data

FLP25-xxx/2(S)		150	275	320	385	440
IEC Electrical						
Nominal AC Voltage (50/60 Hz)	U_o / U_n	120 V	230 V	230 V	230 V	400 V
Maximum Continuous Operating Voltage (AC)	U_C	150 V	275 V	320 V	385 V	440 V
Nominal Discharge Current (8/20 µs)	I_n			25 kA		
Maximum Discharge Current (8/20 µs)	I_{max}			100 kA		
Impulse Discharge Current (10/350 µs)	I_{imp}			25 kA		
Specific Energy	W/R			156 kJ/Ω		
Charge	Q			12,5 As		
Voltage Protection Level	U_p	1000 V	1500 V	1600 V	1800 V	2000 V
Response Time	t_A			< 25 ns		
Max. Backup Fuse				315 A gL / gG		
Short-Circuit Current Rating (AC)	I_{SCCR}			50 kA		
TOV Withstand 5 s	U_T	180 V	335 V	335 V	335 V	580 V
TOV 120 min	U_T	230 V	440 V	440 V	440 V	765 V
Number of Ports				1		
Mechanical & Environmental						
Operating Temperature Range	T_a			-40 ºF to +158 ºF [-40 ºC to +70 ºC]		
Permissible Operating Humidity	RH			5% to 95%		
Atmospheric Pressure and Altitude				80 kPa to 106 kPa / -500 m to 2000 m		
Terminal Screw Torque	M_{max}			39.9 lbf·in [4.5 Nm]		
Conductor Cross Section (max.)				2 AWG (Solid, Stranded) / 4 AWG (Flexible)		
				35 mm² (Solid, Stranded) / 25 mm² (Flexible)		
Mounting				35 mm DIN Rail, EN 60715		
Degree of Protection				IP20 (built-in)		
Housing Material				Thermoplastic: Extinguishing Degree UL 94 V-0		
Thermal Protection				Yes		
Operating State / Fault Indication				White ok / Red defect		
Remote Contacts (RC)				Optional		
RC Switching Capacity				AC: 250 V / 0.5 A; DC: 250 V / 0.1 A; 125 V / 0.2 A; 75 V / 0.5 A		
RC Conductor Cross Section (max.)				16 AWG (Solid) / 1.5 mm² (Solid)		
Order Information						
Ordering Code		150	275	320	385	440
FLP25-xxx/2		2515021	2527521	2532021	2538521	2544021
FLP25-xxx/2S (with remote contacts)		2515022	2527522	2532022	2538522	2544022

Internal Configuration

Legend

- L Line Conductor Terminal
- N Neutral Conductor Terminal
- ⏚ PE/G Conductor Terminal
- S Signalling Contacts Optional

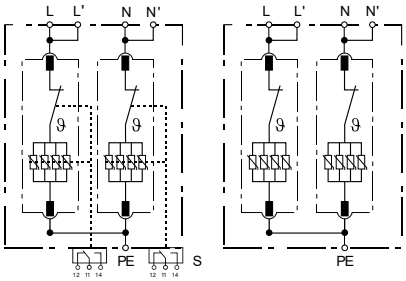

Dimensions & Packaging

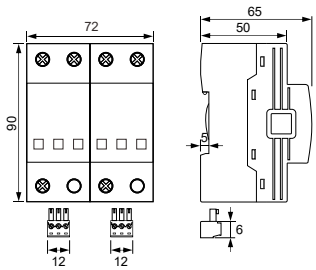

[mm]

Complete Unit					
FLP25-xxx/2(S)	150	275	320	385	440
DIN 43880 Dimension	1 CTN				
Packaging Dimensions (H x W x L)	[240 × 220 × 330 mm]				
Standard Order Quantity	24 Units				

Connection Diagram

TN-S (Single-phase, 2+0)

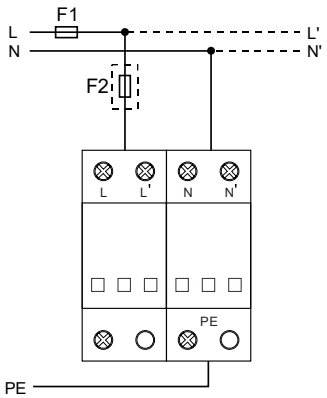

AC Surge Protective Device

FLP25-xxx/3(S)

Class I • Type 1

Location of Use: Main Distribution Boards
Network Systems: TN-C
Mode of Protection: L-PEN
Surge Ratings: I_{imp} = 25 kA (10/350 µs)
I_n = 25 kA (8/20 µs)
IEC/EN Category: Class I / Type 1
Protective Elements: High Energy MOV
Housing: Monobloc Design
Compliance: IEC 61643-11:2011
EN 61643-11:2012

Technical Data

FLP25-xxx/3(S)		150	275	320	385	440
IEC Electrical						
Nominal AC Voltage (50/60 Hz)	U_o / U_n	120 V	230 V	230 V	230 V	400 V
Maximum Continuous Operating Voltage (AC)	U_C	150 V	275 V	320 V	385 V	440 V
Nominal Discharge Current (8/20 µs)	I_n			25 kA		
Maximum Discharge Current (8/20 µs)	I_{max}			100 kA		
Impulse Discharge Current (10/350 µs)	I_{imp}			25 kA		
Specific Energy	W/R			156 kJ/Ω		
Charge	Q			12,5 As		
Voltage Protection Level	U_p	1000 V	1500 V	1600 V	1800 V	2000 V
Response Time	t_A			< 25 ns		
Max. Backup Fuse				315 A gL / gG		
Short-Circuit Current Rating (AC)	I_{SCCR}			50 kA		
TOV Withstand 5 s	U_T	180 V	335 V	335 V	335 V	580 V
TOV 120 min	U_T	230 V	440 V	440 V	440 V	765 V
Number of Ports				1		
Mechanical & Environmental						
Operating Temperature Range	T_a			-40 ºF to +158 ºF [-40 ºC to +70 ºC]		
Permissible Operating Humidity	RH			5% to 95%		
Atmospheric Pressure and Altitude				80 kPa to 106 kPa / -500 m to 2000 m		
Terminal Screw Torque	M_{max}			39.9 lbf·in [4.5 Nm]		
Conductor Cross Section (max.)				2 AWG (Solid, Stranded) / 4 AWG (Flexible)		
				35 mm² (Solid, Stranded) / 25 mm² (Flexible)		
Mounting				35 mm DIN Rail, EN 60715		
Degree of Protection				IP20 (built-in)		
Housing Material				Thermoplastic: Extinguishing Degree UL 94 V-0		
Thermal Protection				Yes		
Operating State / Fault Indication				White ok / Red defect		
Remote Contacts (RC)				Optional		
RC Switching Capacity				AC: 250 V / 0.5 A; DC: 250 V / 0.1 A; 125 V / 0.2 A; 75 V / 0.5 A		
RC Conductor Cross Section (max.)				16 AWG (Solid) / 1.5 mm² (Solid)		
Order Information						
Ordering Code		150	275	320	385	440
FLP25-xxx/3		2515031	2527531	2532031	2538531	2544031
FLP25-xxx/3S (with remote contacts)		2515032	2527532	2532032	2538532	2544032

Internal Configuration

Legend

- L Line Conductor Terminal
- N Neutral Conductor Terminal
- ⏚ PE/G Conductor Terminal
- S Signalling Contacts Optional

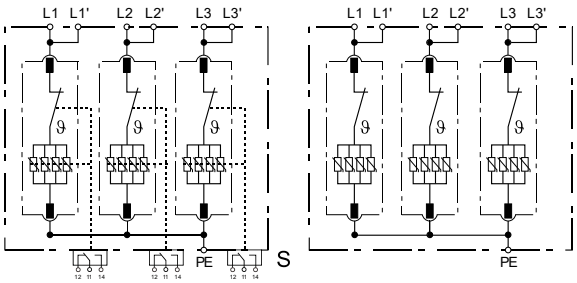

Dimensions & Packaging

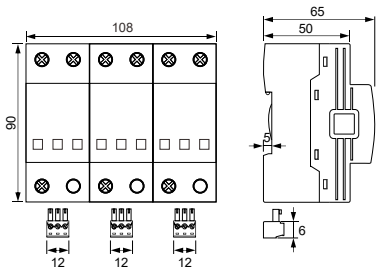

[mm]

Complete Unit					
FLP25-xxx/3(S)	150	275	320	385	440
DIN 43880 Dimension	1 CTN				
Packaging Dimensions (H x W x L)	[240 × 220 × 330 mm]				
Standard Order Quantity	16 Units				

Connection Diagram

TN-C (Three-phase, 3+0)

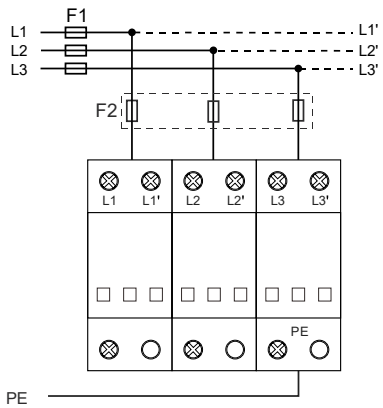

AC Surge Protective Device

FLP25-xxx/4(S)

Class I • Type 1

Location of Use: Main Distribution Boards
Network Systems: TN-S
Mode of Protection: L-PE, N-PE
Surge Ratings: I_{imp} = 25 kA (10/350 µs)
I_n = 25 kA (8/20 µs)
IEC/EN Category: Class I / Type 1
Protective Elements: High Energy MOV
Housing: Monobloc Design
Compliance: IEC 61643-11:2011
EN 61643-11:2012

Technical Data

FLP25-xxx/4(S)		150	275	320	385	440
IEC Electrical						
Nominal AC Voltage (50/60 Hz)	U_o / U_n	120 V	230 V	230 V	230 V	400 V
Maximum Continuous Operating Voltage (AC)	U_C	150 V	275 V	320 V	385 V	440 V
Nominal Discharge Current (8/20 µs)	I_n			25 kA		
Maximum Discharge Current (8/20 µs)	I_{max}			100 kA		
Impulse Discharge Current (10/350 µs)	I_{imp}			25 kA		
Specific Energy	W/R			156 kJ/Ω		
Charge	Q			12,5 As		
Voltage Protection Level	U_p	1000 V	1500 V	1600 V	1800 V	2000 V
Response Time	t_A			< 25 ns		
Max. Backup Fuse				315 A gL / gG		
Short-Circuit Current Rating (AC)	I_{SCCR}			50 kA		
TOV Withstand 5 s	U_T	180 V	335 V	335 V	335 V	580 V
TOV 120 min	U_T	230 V	440 V	440 V	440 V	765 V
Number of Ports				1		
Mechanical & Environmental						
Operating Temperature Range	T_a			-40 ºF to + 158 ºF [-40 ºC to + 70 ºC]		
Permissible Operating Humidity	RH			5% to 95%		
Atmospheric Pressure and Altitude				80 kPa to 106 kPa / -500 m to 2000 m		
Terminal Screw Torque	M_{max}			39.9 lbf·in [4.5 Nm]		
Conductor Cross Section (max.)				2 AWG (Solid, Stranded) / 4 AWG (Flexible)		
				35 mm² (Solid, Stranded) / 25 mm² (Flexible)		
Mounting				35 mm DIN Rail, EN 60715		
Degree of Protection				IP 20 (built-in)		
Housing Material				Thermoplastic: Extinguishing Degree UL 94 V-0		
Thermal Protection				Yes		
Operating State / Fault Indication				White ok / Red defect		
Remote Contacts (RC)				Optional		
RC Switching Capacity				AC: 250 V / 0.5 A; DC: 250 V / 0.1 A; 125 V / 0.2 A; 75 V / 0.5 A		
RC Conductor Cross Section (max.)				16 AWG (Solid) / 1.5 mm² (Solid)		
Order Information						
Ordering Code		150	275	320	385	440
FLP25-xxx/4		2515041	2527541	2532041	2538541	2544041
FLP25-xxx/4S (with remote contacts)		2515042	2527542	2532042	2538542	2544042

Internal Configuration

Legend

- L Line Conductor Terminal
- N Neutral Conductor Terminal
- ⏚ PE/G Conductor Terminal
- S Signalling Contacts Optional

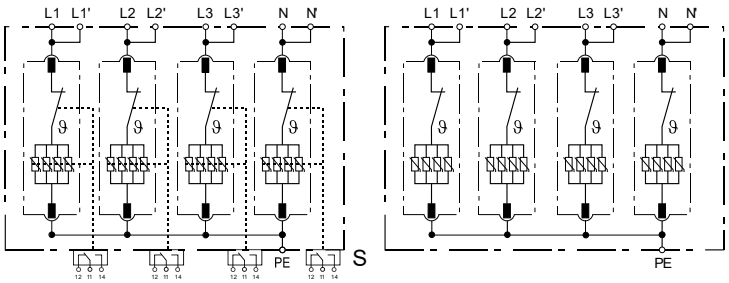

Dimensions & Packaging

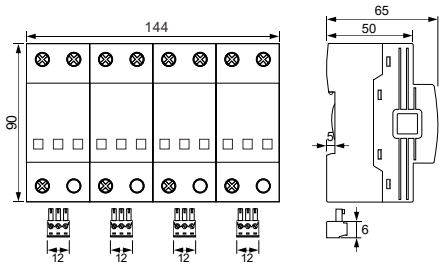

[mm]

Complete Unit					
FLP25-xxx/4(S)	150	275	320	385	440
DIN 43880 Dimension	1 CTN				
Packaging Dimensions (H x W x L)	[240 × 220 × 330 mm]				
Standard Order Quantity	12 Units				

Connection Diagram

TN-S (Three-phase, 4+0)

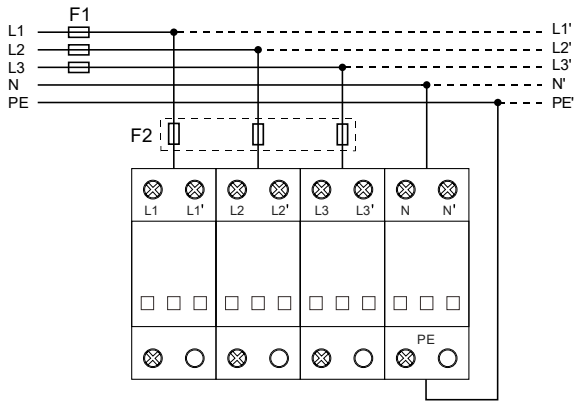

AC Surge Protective Device

FLP25-xxx/1(S)+1

Class I • Type 1

Location of Use:	Main Distribution Boards
Network Systems:	TT, TN-S
Mode of Protection:	L-N, N-PE
Surge Ratings:	I_{imp} = 25 kA / 50 kA (10/350 µs) I_n = 25 kA (8/20 µs)
IEC/EN Category:	Class I / Type 1
Protective Elements:	High Energy MOV and GDT
Housing:	Monobloc Design
Compliance:	IEC 61643-11:2011 EN 61643-11:2012

Technical Data

FLP25-xxx/1(S)+1			75	150	275	320	385	440
IEC Electrical								
Nominal AC Voltage (50/60 Hz)			60 V	120 V	230 V	230 V	230 V	400 V
Maximum Continuous Operating Voltage	(L-N)	U_C	75 V	150 V	275 V	320 V	385 V	440 V
	(N-PE)	U_C	255 V					
Nominal Discharge Current (8/20 µs)	(L-N) / (N-PE)	I_n	25 kA / 50 kA					
Maximum Discharge Current (8/20 µs)	(L-N) / (N-PE)	I_{max}	100 kA					
Impulse Discharge Current (10/350 µs)	(L-N) / (N-PE)	I_{imp}	25 kA / 50 kA					
Specific Energy	(L-N) / (N-PE)	W/R	156 kJ/Ω / 625 kJ/Ω					
Charge	(L-N) / (N-PE)	Q	12.5 As / 25 As					
Voltage Protection Level	(L-N) / (N-PE)	U_p	0.7 kV / 1.5 kV	1.0 kV / 1.5 kV	1.5 kV / 1.5 kV	1.6 kV / 1.5 kV	1.8 kV / 1.5 kV	2.0 kV / 1.5 kV
Follow Current Interrupt Rating	(N-PE)	I_{fi}	100 A_{RMS}					
Response Time	(L-N) / (N-PE)	t_A	< 25 ns / < 100 ns					
Max. Backup Fuse			315 A gL / gG					
Short-Circuit Current Rating (AC)	(L-N)	I_{SCCR}	50 kA					
TOV Withstand 5 s	(L-N)	U_T	114 V	180 V	335 V	335 V	335 V	580 V
TOV 120 min	(L-N)	U_T	114 V	230 V	440 V	440 V	440 V	765 V
TOV Withstand 200 ms	(N-PE)	U_T	1200 V					
Number of Ports			1					
Mechanical & Environmental								
Operating Temperature Range		T_a	-40 ºF to +158 ºF [-40 ºC to +70 ºC]					
Permissible Operating Humidity		RH	5% to 95%					
Atmospheric Pressure and Altitude			80 kPa to 106 kPa / -500 m to 2000 m					
Terminal Screw Torque		M_{max}	39.9 lbf·in [4.5 Nm]					
Conductor Cross Section (max.)			2 AWG (Solid, Stranded) / 4 AWG (Flexible)					
			35 mm² (Solid, Stranded) / 25 mm² (Flexible)					
Mounting			35 mm DIN Rail, EN 60715					
Degree of Protection			IP20 (built-in)					
Housing Material			Thermoplastic: Extinguishing Degree UL 94 V-0					
Thermal Protection			Yes					
Operating State / Fault Indication			White ok / Red defect					
Remote Contacts (RC)			Optional					
RC Switching Capacity			AC: 250 V / 0.5 A; DC: 250 V / 0.1 A; 125 V / 0.2 A; 75 V / 0.5 A					
RC Conductor Cross Section (max.)			16 AWG (Solid) / 1.5 mm² (Solid)					
Order Information								
Ordering Code			75	150	275	320	385	440
FLP25-xxx/1+1			2507513	2515013	2527513	2532013	2538513	2544013
FLP25-xxx/1S+1 (with remote contacts)			2507514	2515014	2527514	2532014	2538514	2544014

Internal Configuration

Legend

- L Line Conductor Terminal
- N Neutral Conductor Terminal
- ⏚ PE/G Conductor Terminal
- S Signalling Contacts Optional

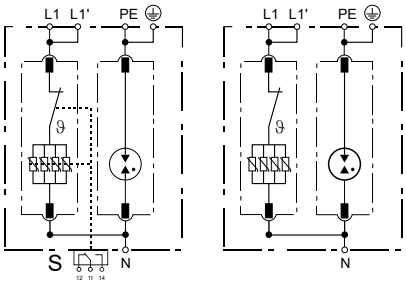

Dimensions & Packaging

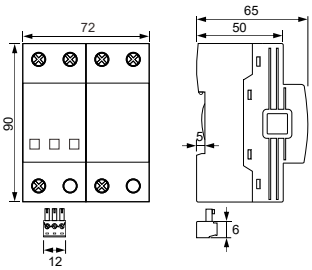

[mm]

Complete Unit						
FLP25-xxx/1(S)	75	150	275	320	385	440
DIN 43880 Dimension	1 CTN					
Packaging Dimensions (H x W x L)	[240 × 220 × 330 mm]					
Standard Order Quantity	24 Units					

Connection Diagram

TN-S, TT (Single-phase, 1+1)

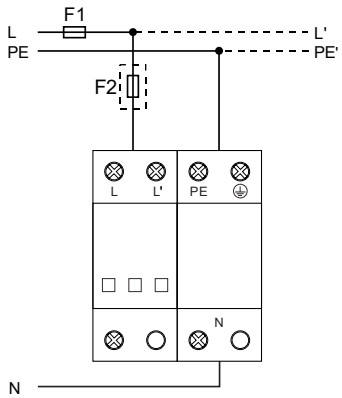

AC Surge Protective Device

FLP25-xxx/3(S)+1

Class I • Type 1

Location of Use:	Main Distribution Boards
Network Systems:	TT, TN-S
Mode of Protection:	L-N, N-PE
Surge Ratings:	I_{imp} = 25 kA / 100 kA (10/350 µs) I_n = 25 kA (8/20 µs)
IEC/EN Category:	Class I / Type 1
Protective Elements:	High Energy MOV and GDT
Housing:	Monobloc Design
Compliance:	IEC 61643-11:2011 EN 61643-11:2012

Technical Data

FLP25-xxx/3(S)+1			150	275	320	385	440
IEC Electrical							
Nominal AC Voltage (50/60 Hz)			120 V	230 V	230 V	230 V	400 V
Maximum Continuous Operating Voltage	(L-N)	U_C	150 V	275 V	320 V	385 V	440 V
	(N-PE)	U_C	255 V				
Nominal Discharge Current (8/20 µs)	(L-N) / (N-PE)	I_n	25 kA / 100 kA				
Maximum Discharge Current (8/20 µs)	(L-N) / (N-PE)	I_{max}	100 kA				
Impulse Discharge Current (10/350 µs)	(L-N) / (N-PE)	I_{imp}	25 kA / 100 kA				
Specific Energy	(L-N) / (N-PE)	W/R	156 kJ/Ω / 2500 kJ/Ω				
Charge	(L-N) / (N-PE)	Q	12.5 As / 50 As				
Voltage Protection Level	(L-N) / (N-PE)	U_p	1.0 kV / 1.5 kV	1.5 kV / 1.5 kV	1.6 kV / 1.5 kV	1.8 kV / 1.5 kV	2.0 kV / 1.5 kV
Follow Current Interrupt Rating	(N-PE)	I_{fi}	100 A_{RMS}				
Response Time	(L-N) / (N-PE)	t_A	< 25 ns / < 100 ns				
Max. Backup Fuse			315 A gL / gG				
Short-Circuit Current Rating (AC)	(L-N)	I_{SCCR}	50 kA				
TOV Withstand 5 s	(L-N)	U_T	180 V	335 V	335 V	335 V	580 V
TOV 120 min	(L-N)	U_T	230 V	440 V	440 V	440 V	765 V
TOV Withstand 200 ms	(N-PE)	U_T	1200 V				
Number of Ports			1				
Mechanical & Environmental							
Operating Temperature Range		T_a	-40 ºF to +158 ºF [-40 ºC to +70 ºC]				
Permissible Operating Humidity		RH	5% to 95%				
Atmospheric Pressure and Altitude			80 kPa to 106 kPa / -500 m to 2000 m				
Terminal Screw Torque		M_{max}	39.9 lbf·in [4.5 Nm]				
Conductor Cross Section (max.)			2 AWG (Solid, Stranded) / 4 AWG (Flexible)				
			35 mm² (Solid, Stranded) / 25 mm² (Flexible)				
Mounting			35 mm DIN Rail, EN 60715				
Degree of Protection			IP20 (built-in)				
Housing Material			Thermoplastic: Extinguishing Degree UL 94 V-0				
Thermal Protection			Yes				
Operating State / Fault Indication			White ok / Red defect				
Remote Contacts (RC)			Optional				
RC Switching Capacity			AC: 250 V / 0.5 A; DC: 250 V / 0.1 A; 125 V / 0.2 A; 75 V / 0.5 A				
RC Conductor Cross Section (max.)			16 AWG (Solid) / 1.5 mm² (Solid)				
Order Information							
Ordering Code			150	275	320	385	440
FLP25-xxx/3+1			2515033	2527533	2532033	2538533	2544033
FLP25-xxx/3S+1 (with remote contacts)			2515034	2527534	2532034	2538534	2544034

Internal Configuration

Legend

- L Line Conductor Terminal
- N Neutral Conductor Terminal
- ⏚ PE/G Conductor Terminal
- S Signalling Contacts Optional

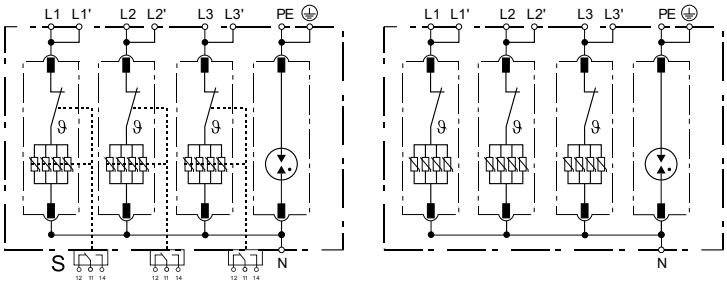

Dimensions & Packaging

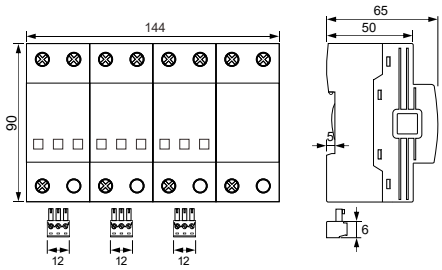

[mm]

Complete Unit					
FLP25-xxx/3(S)+1	150	275	320	385	440
DIN 43880 Dimension	1 CTN				
Packaging Dimensions (H x W x L)	[240 × 220 × 330 mm]				
Standard Order Quantity	12 Units				

Connection Diagram

TN-S, TT (Three-phase, 3+1)

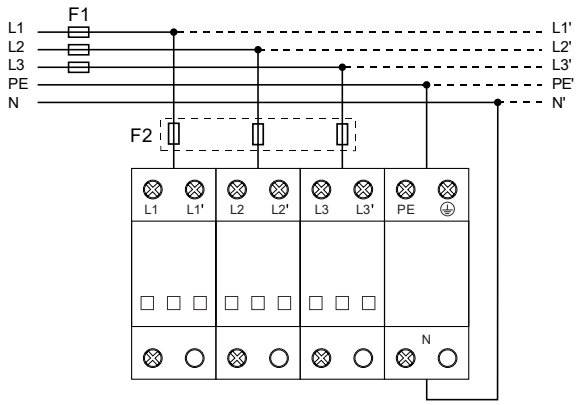

AC Surge Protective Device

FLP12,5-xxx/1(S)

Class I • Class II • Type 1 • Type 2

Location of Use: Main Distribution Boards
Network Systems: TN-S, TN-C, TT (only L-N)
Mode of Protection: L-PE, N-PE (only TN-S), L-PEN, L-N
Surge Ratings: I_{imp} = 12.5 kA (10/350 µs)
I_n = 20 kA (8/20 µs)
IEC/EN Category: Class I+II / Type 1+2
Protective Elements: High Energy MOV
Housing: Pluggable Design
Compliance: IEC 61643-11:2011
EN 61643-11:2012

Technical Data

FLP12,5-xxx/1(S)		75	150	275	320	385	440
IEC Electrical							
Nominal AC Voltage (50/60 Hz)	U_o / U_n	60 V	120 V	230 V	230 V	230 V	400 V
Maximum Continuous Operating Voltage (AC)	U_C	75 V	150 V	275 V	320 V	385 V	440 V
Nominal Discharge Current (8/20 µs)	I_n	20 kA	20 kA	20 kA	20 kA	20 kA	20 kA
Maximum Discharge Current (8/20 µs)	I_{max}	50 kA	50 kA	50 kA	50 kA	50 kA	50 kA
Impulse Discharge Current (10/350 µs)	I_{imp}	12.5 kA	12.5 kA	12.5 kA	12.5 kA	12.5 kA	12.5 kA
Specific Energy	W/R	39 kJ/Ω	39 kJ/Ω	39 kJ/Ω	39 kJ/Ω	25 kJ/Ω	25 kJ/Ω
Charge	Q	6.25 As	6.25 As	6.25 As	6.25 As	5 As	5 As
Voltage Protection Level	U_p	700 V	1000 V	1500 V	1600 V	1800 V	2000 V
Residual Current at U_c	I_{PE}	< 0.5 mA					
Response Time	t_A	< 25 ns					
Max. Backup Fuse		160 A gL / gG					
Short-Circuit Current Rating (AC)	I_{SCCR}	25 kA					
TOV Withstand 5 s	U_T	114 V	180 V	335 V	335 V	335 V	580 V
TOV 120 min	U_T	114 V	230 V	440 V	440 V	440 V	765 V
	mode	Withstand	Safe Fail	Safe Fail	Safe Fail	Safe Fail	Safe Fail
Number of Ports							
Mechanical & Environmental							
Operating Temperature Range	T_a	-40 ºF to +158 ºF [-40 ºC to +70 ºC]					
Permissible Operating Humidity	RH	5% to 95%					
Atmospheric Pressure and Altitude		80 kPa to 106 kPa / -500 m to 2000 m					
Terminal Screw Torque	M_{max}	39.9 lbf·in [4.5 Nm]					
Conductor Cross Section (max.)		2 AWG (Solid, Stranded) / 4 AWG (Flexible)					
		35 mm² (Solid, Stranded) / 25 mm² (Flexible)					
Mounting		35 mm DIN Rail, EN 60715					
Degree of Protection		IP20 (built-in)					
Housing Material		Thermoplastic: Extinguishing Degree UL 94 V-0					
Thermal Protection		Yes					
Operating State / Fault Indication		Green ok / Red defect					
Remote Contacts (RC)		Optional					
RC Switching Capacity		AC: 250 V / 0.5 A; DC: 250 V / 0.1 A; 125 V / 0.2 A; 75 V / 0.5 A					
RC Conductor Cross Section (max.)		16 AWG (Solid) / 1.5 mm² (Solid)					
Order Information							
Ordering Code		75	150	275	320	385	440
FLP12,5-xxx/1		1207511	1215011	1227511	1232011	1238511	1244011
FLP12,5-xxx/1S (with remote contacts)		1207512	1215012	1227512	1232012	1238512	1244012
FLP12,5-xxx/0 (spare modules)		1207501	1215001	1227501	1232001	1238501	1244001

Internal Configuration

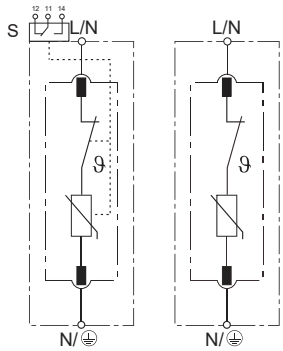

Legend

- L Line Conductor Terminal
- N Neutral Conductor Terminal
- ⏚ PE/G Conductor Terminal
- S Signalling Contacts Optional

Dimensions & Packaging

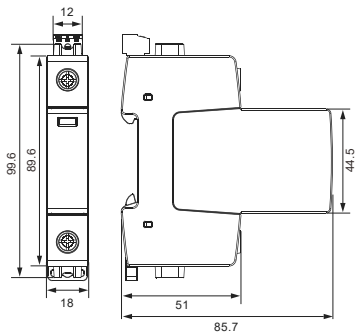

[mm]

Complete Unit						
FLP12,5-xxx/1(S)	75	150	275	320	385	440
DIN 43880 Dimension	1 CTN					
Packaging Dimensions (H x W x L)	[210 × 220 × 330 mm]					
Standard Order Quantity	64 Units					

Spare Plug

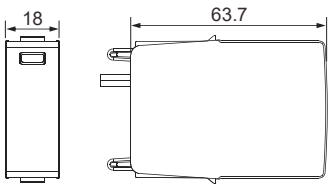

Single Unit						
FLP12,5-xxx/0	75	150	275	320	385	440
DIN 43880 Dimension	1 CTN					
Packaging Dimensions (H x W x L)	[210 × 220 × 330 mm]					
Standard Order Quantity	120 Units					

Connection Diagram

TN-S, TN-C, TT (Single-phase, 1+0)

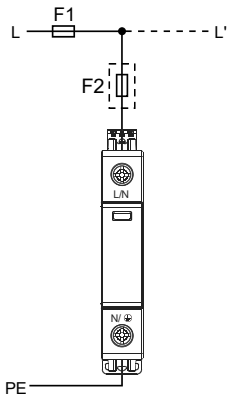

AC Surge Protective Device

FLP12,5-xxx/2(S)

Class I • Class II • Type 1 • Type 2

Location of Use: Main Distribution Boards
Network Systems: TN-S
Mode of Protection: L-PE, N-PE
Surge Ratings: I_{imp} = 12.5 kA (10/350 µs)
I_n = 20 kA (8/20 µs)
IEC/EN Category: Class I+II / Type 1+2
Protective Elements: High Energy MOV
Housing: Pluggable Design
Compliance: IEC 61643-11:2011
EN 61643-11:2012

Technical Data

FLP12,5-xxx/2(S)		75	150	275	320	385	440
IEC Electrical							
Nominal AC Voltage (50/60 Hz)	U_o / U_n	60 V	120 V	230 V	230 V	230 V	400 V
Maximum Continuous Operating Voltage (AC)	U_C	75 V	150 V	275 V	320 V	385 V	440 V
Nominal Discharge Current (8/20 µs)	I_n	20 kA	20 kA	20 kA	20 kA	20 kA	20 kA
Maximum Discharge Current (8/20 µs)	I_{max}	50 kA	50 kA	50 kA	50 kA	50 kA	50 kA
Impulse Discharge Current (10/350 µs)	I_{imp}	12.5 kA	12.5 kA	12.5 kA	12.5 kA	12.5 kA	12.5 kA
Specific Energy	W/R	39 kJ/Ω	39 kJ/Ω	39 kJ/Ω	39 kJ/Ω	25 kJ/Ω	25 kJ/Ω
Charge	Q	6.25 As	6.25 As	6.25 As	6.25 As	5 As	5 As
Voltage Protection Level	U_p	700 V	1000 V	1500 V	1600 V	1800 V	2000 V
Residual Current at U_c	I_{PE}	< 0.5 mA					
Response Time	t_A	< 25 ns					
Max. Backup Fuse		160 A gL / gG					
Short-Circuit Current Rating (AC)	I_{SCCR}	25 kA					
TOV Withstand 5 s	U_T	114 V	180 V	335 V	335 V	335 V	580 V
TOV 120 min	U_T	114 V	230 V	440 V	440 V	440 V	765 V
	mode	Withstand	Safe Fail	Safe Fail	Safe Fail	Safe Fail	Safe Fail
Number of Ports							
Mechanical & Environmental							
Operating Temperature Range	T_a	-40 ºF to +158 ºF [-40 ºC to +70 ºC]					
Permissible Operating Humidity	RH	5% to 95%					
Atmospheric Pressure and Altitude		80 kPa to 106 kPa / -500 m to 2000 m					
Terminal Screw Torque	M_{max}	39.9 lbf·in [4.5 Nm]					
Conductor Cross Section (max.)		2 AWG (Solid, Stranded) / 4 AWG (Flexible)					
		35 mm² (Solid, Stranded) / 25 mm² (Flexible)					
Mounting		35 mm DIN Rail, EN 60715					
Degree of Protection		IP20 (built-in)					
Housing Material		Thermoplastic: Extinguishing Degree UL 94 V-0					
Thermal Protection		Yes					
Operating State / Fault Indication		Green ok / Red defect					
Remote Contacts (RC)		Optional					
RC Switching Capacity		AC: 250 V / 0.5 A; DC: 250 V / 0.1 A; 125 V / 0.2 A; 75 V / 0.5 A					
RC Conductor Cross Section (max.)		16 AWG (Solid) / 1.5 mm² (Solid)					
Order Information							
Ordering Code		75	150	275	320	385	440
FLP12,5-xxx/2		1207521	1215021	1227521	1232021	1238521	1244021
FLP12,5-xxx/2S (with remote contacts)		1207522	1215022	1227522	1232022	1238522	1244022
FLP12,5-xxx/0 (spare modules)		1207501	1215001	1227501	1232001	1238501	1244001

Internal Configuration

Legend

- L Line Conductor Terminal
- N Neutral Conductor Terminal
- ⏚ PE/G Conductor Terminal
- S Signalling Contacts Optional

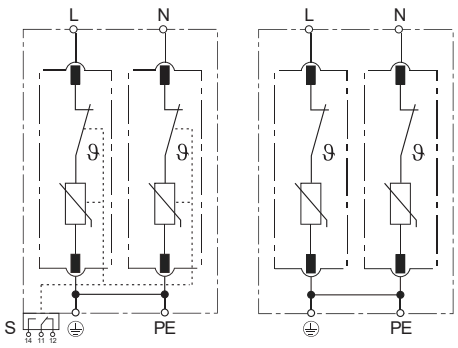

Dimensions & Packaging

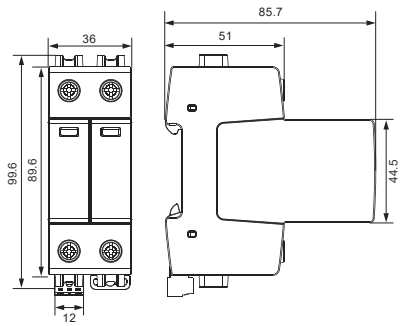

[mm]

Complete Unit						
FLP12,5-xxx/2(S)	75	150	275	320	385	440
DIN 43880 Dimension	1 CTN					
Packaging Dimensions (H x W x L)	[210 × 220 × 330 mm]					
Standard Order Quantity	32 Units					

Spare Plug

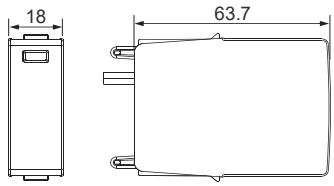

Single Unit						
FLP12,5-xxx/0	75	150	275	320	385	440
DIN 43880 Dimension	1 CTN					
Packaging Dimensions (H x W x L)	[210 × 220 × 330 mm]					
Standard Order Quantity	120 Units					

Connection Diagram

TN-S (Single-phase, 2+0)

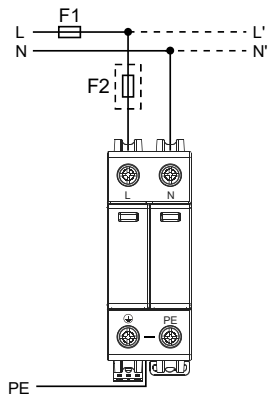

AC Surge Protective Device

FLP12,5-xxx/3(S)

Class I • Class II • Type 1 • Type 2

Location of Use: Main Distribution Boards
Network Systems: TN-C,
Mode of Protection: L-PEN
Surge Ratings: I_{imp} = 12.5 kA (10/350 µs)
I_n = 20 kA (8/20 µs)
IEC/EN Category: Class I+II / Type 1+2
Protective Elements: High Energy MOV
Housing: Pluggable Design
Compliance: IEC 61643-11:2011
EN 61643-11:2012

Technical Data

FLP12,5-xxx/3(S)		150	275	320	385	440
IEC Electrical						
Nominal AC Voltage (50/60 Hz)	U_o / U_n	120 V	230 V	230 V	230 V	400 V
Maximum Continuous Operating Voltage (AC)	U_C	150 V	275 V	320 V	385 V	440 V
Nominal Discharge Current (8/20 µs)	I_n	20 kA	20 kA	20 kA	20 kA	20 kA
Maximum Discharge Current (8/20 µs)	I_{max}	50 kA	50 kA	50 kA	50 kA	50 kA
Impulse Discharge Current (10/350 µs)	I_{imp}	12.5 kA	12.5 kA	12.5 kA	12.5 kA	12.5 kA
Specific Energy	W/R	39 kJ/Ω	39 kJ/Ω	39 kJ/Ω	25 kJ/Ω	25 kJ/Ω
Charge	Q	6.25 As	6.25 As	6.25 As	5 As	5 As
Voltage Protection Level	U_p	1000 V	1500 V	1600 V	1800 V	2000 V
Residual Current at U_c	I_{PE}	< 0.5 mA				
Response Time	t_A	< 25 ns				
Max. Backup Fuse		160 A gL / gG				
Short-Circuit Current Rating (AC)	I_{SCCR}	25 kA				
TOV Withstand 5 s	U_T	180 V	335 V	335 V	335 V	580 V
TOV 120 min	U_T	230 V	440 V	440 V	440 V	765 V
	mode	Safe Fail	Safe Fail	Safe Fail	Safe Fail	Safe Fail
Number of Ports						
Mechanical & Environmental						
Operating Temperature Range	T_a	-40 ºF to +158 ºF [-40 ºC to +70 ºC]				
Permissible Operating Humidity	RH	5% to 95%				
Atmospheric Pressure and Altitude		80 kPa to 106 kPa / -500 m to 2000 m				
Terminal Screw Torque	M_{max}	39.9 lbf·in [4.5 Nm]				
Conductor Cross Section (max.)		2 AWG (Solid, Stranded) / 4 AWG (Flexible)				
		35 mm² (Solid, Stranded) / 25 mm² (Flexible)				
Mounting		35 mm DIN Rail, EN 60715				
Degree of Protection		IP20 (built-in)				
Housing Material		Thermoplastic: Extinguishing Degree UL 94 V-0				
Thermal Protection		Yes				
Operating State / Fault Indication		Green ok / Red defect				
Remote Contacts (RC)		Optional				
RC Switching Capacity		AC: 250 V / 0.5 A; DC: 250 V / 0.1 A; 125 V / 0.2 A; 75 V / 0.5 A				
RC Conductor Cross Section (max.)		16 AWG (Solid) / 1.5 mm² (Solid)				
Order Information						
Ordering Code		150	275	320	385	440
FLP12,5-xxx/3		1215031	1227531	1232031	1238531	1244031
FLP12,5-xxx/3S (with remote contacts)		1215032	1227532	1232032	1238532	1244032
FLP12,5-xxx/0 (spare modules)		1215001	1227501	1232001	1238501	1244001

Internal Configuration

Legend

- L Line Conductor Terminal
- N Neutral Conductor Terminal
- ⏚ PE/G Conductor Terminal
- S Signalling Contacts Optional

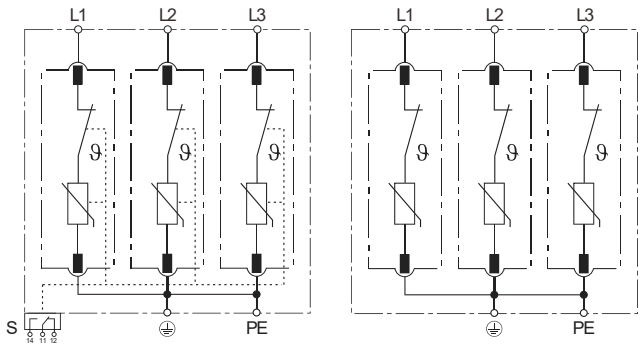

Dimensions & Packaging

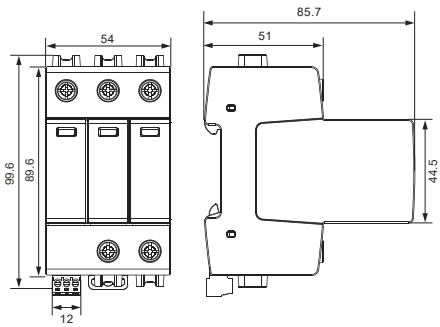

[mm]

Complete Unit					
FLP12,5-xxx/3(S)	150	275	320	385	440
DIN 43880 Dimension	1 CTN				
Packaging Dimensions (H x W x L)	[210 × 220 × 330 mm]				
Standard Order Quantity	20 Units				

Spare Plug

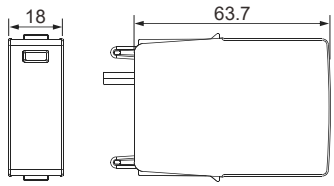

Single Unit					
FLP12,5-xxx/0	150	275	320	385	440
DIN 43880 Dimension	1 CTN				
Packaging Dimensions (H x W x L)	[210 × 220 × 330 mm]				
Standard Order Quantity	120 Units				

Connection Diagram

TN-C (Three-phase, 3+0)

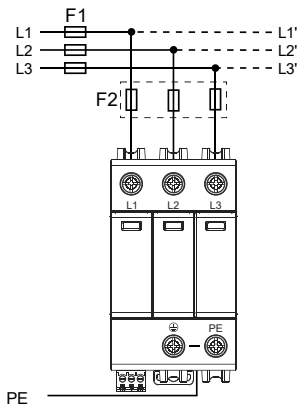

AC Surge Protective Device

FLP12,5-xxx/4(S)

Class I • Class II • Type 1 • Type 2

Location of Use: Main Distribution Boards
Network Systems: TN-S
Mode of Protection: L-PE, N-PE
Surge Ratings: I_{imp} = 12.5 kA (10/350 µs)
I_n = 20 kA (8/20 µs)
IEC/EN Category: Class I+II / Type 1+2
Protective Elements: High Energy MOV
Housing: Pluggable Design
Compliance: IEC 61643-11:2011
EN 61643-11:2012

Technical Data

FLP12,5-xxx/4(S)		150	275	320	385	440
IEC Electrical						
Nominal AC Voltage (50/60 Hz)	U_o / U_n	120 V	230 V	230 V	230 V	400 V
Maximum Continuous Operating Voltage (AC)	U_C	150 V	275 V	320 V	385 V	440 V
Nominal Discharge Current (8/20 µs)	I_n	20 kA	20 kA	20 kA	20 kA	20 kA
Maximum Discharge Current (8/20 µs)	I_{max}	50 kA	50 kA	50 kA	50 kA	50 kA
Impulse Discharge Current (10/350 µs)	I_{imp}	12.5 kA	12.5 kA	12.5 kA	12.5 kA	12.5 kA
Specific Energy	W/R	39 kJ/Ω	39 kJ/Ω	39 kJ/Ω	25 kJ/Ω	25 kJ/Ω
Charge	Q	6.25 As	6.25 As	6.25 As	5 As	5 As
Voltage Protection Level	U_p	1000 V	1500 V	1600 V	1800 V	2000 V
Residual Current at U_c	I_{PE}	< 0.5 mA				
Response Time	t_A	< 25 ns				
Max. Backup Fuse		160 A gL / gG				
Short-Circuit Current Rating (AC)	I_{SCCR}	25 kA				
TOV Withstand 5 s	U_T	180 V	335 V	335 V	335 V	580 V
TOV 120 min	U_T	230 V	440 V	440 V	440 V	765 V
	mode	Safe Fail	Safe Fail	Safe Fail	Safe Fail	Safe Fail
Number of Ports		1				
Mechanical & Environmental						
Operating Temperature Range	T_a	-40 ºF to +158 ºF [-40 ºC to +70 ºC]				
Permissible Operating Humidity	RH	5% to 95%				
Atmospheric Pressure and Altitude		80 kPa to 106 kPa / -500 m to 2000 m				
Terminal Screw Torque	M_{max}	39.9 lbf·in [4.5 Nm]				
Conductor Cross Section (max.)		2 AWG (Solid, Stranded) / 4 AWG (Flexible)				
		35 mm² (Solid, Stranded) / 25 mm² (Flexible)				
Mounting		35 mm DIN Rail, EN 60715				
Degree of Protection		IP20 (built-in)				
Housing Material		Thermoplastic: Extinguishing Degree UL 94 V-0				
Thermal Protection		Yes				
Operating State / Fault Indication		Green ok / Red defect				
Remote Contacts (RC)		Optional				
RC Switching Capacity		AC: 250 V / 0.5 A; DC: 250 V / 0.1 A; 125 V / 0.2 A; 75 V / 0.5 A				
RC Conductor Cross Section (max.)		16 AWG (Solid) / 1.5 mm² (Solid)				
Order Information						
Ordering Code		150	275	320	385	440
FLP12,5-xxx/4		1215041	1227541	1232041	1238541	1244041
FLP12,5-xxx/4S (with remote contacts)		1215042	1227542	1232042	1238542	1244042
FLP12,5-xxx/0 (spare modules)		1215001	1227501	1232001	1238501	1244001

Internal Configuration

Legend

- L Line Conductor Terminal
- N Neutral Conductor Terminal
- ⏚ PE/G Conductor Terminal
- S Signalling Contacts Optional

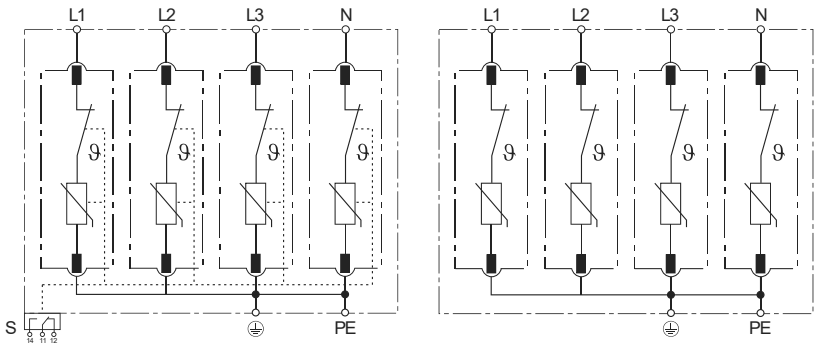

Dimensions & Packaging

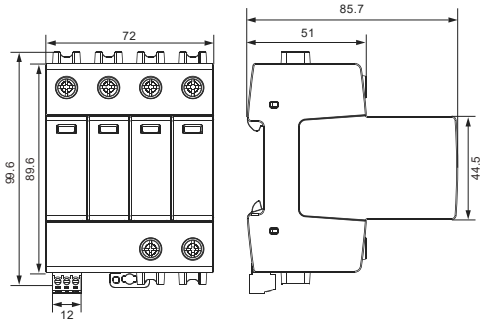

[mm]

Complete Unit					
FLP12,5-xxx/4(S)	150	275	320	385	440
DIN 43880 Dimension	1 CTN				
Packaging Dimensions (H x W x L)	[210 × 220 × 330 mm]				
Standard Order Quantity	16 Units				

Spare Plug

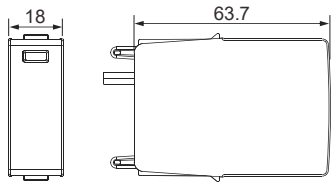

Single Unit					
FLP12,5-xxx/0	150	275	320	385	440
DIN 43880 Dimension	1 CTN				
Packaging Dimensions (H x W x L)	[210 × 220 × 330 mm]				
Standard Order Quantity	120 Units				

Connection Diagram

TN-S (Three-phase, 4+0)

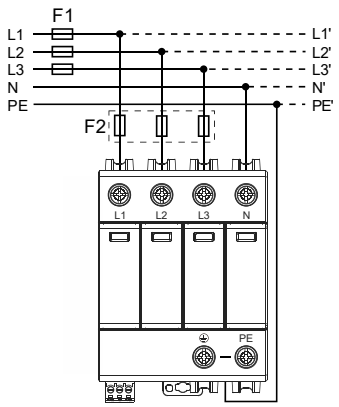

AC Surge Protective Device

FLP12,5-xxx/1(S)+1

Class I • Class II • Type 1 • Type 2

Location of Use: Main Distribution Boards
Network Systems: TT, TN-S
Mode of Protection: L-N, N-PE
Surge Ratings: I_{imp} = 12.5 kA / 25 kA (10/350 µs)
I_n = 20 kA (8/20 µs)
IEC/EN Category: Class I+II / Type 1+2
Protective Elements: High Energy MOV and GDT
Housing: Pluggable Design
Compliance: IEC 61643-11:2011
EN 61643-11:2012

Technical Data

FLP12,5-xxx/1(S)+1			75	150	275	320	385	440
IEC Electrical								
Nominal AC Voltage (50/60 Hz)			60 V	120 V	230 V	230 V	230 V	400 V
Maximum Continuous Operating Voltage	(L-N)	U_C	75 V	150 V	275 V	320 V	385 V	440 V
	(N-PE)	U_C	255 V					
Nominal Discharge Current (8/20 µs)	(L-N) / (N-PE)	I_n	20 kA / 25 kA					
Maximum Discharge Current (8/20 µs)	(L-N) / (N-PE)	I_{max}	50 kA / 50 kA					
Impulse Discharge Current (10/350 µs)	(L-N) / (N-PE)	I_{imp}	12.5 kA / 25 kA					
Specific Energy	(L-N) / (N-PE)	W/R	39 kJ/Ω / 156 kJ/Ω					
Charge	(L-N) / (N-PE)	Q	6.25 As / 12.5 As					
Voltage Protection Level	(L-N) / (N-PE)	U_p	0.7 kV / 1.5 kV	1.0 kV / 1.5 kV	1.5 kV / 1.5 kV	1.6 kV / 1.5 kV	1.8 kV / 1.5 kV	2.0 kV / 1.5 kV
Follow Current Interrupt Rating	(N-PE)	I_{fi}	100 A_{RMS}					
Residual Current at U_C		I_{PE}	none					
Response Time	(L-N) / (N-PE)	t_A	< 25 ns / < 100 ns					
Max. Backup Fuse			160 A gL / gG					
Short-Circuit Current Rating (AC)	(L-N)	I_{SCCR}	25 kA					
TOV Withstand 5 s	(L-N)	U_T	114 V	180 V	335 V	335 V	335 V	580 V
TOV 120 min	(L-N)	U_T	114 V	230 V	440 V	440 V	440 V	765 V
		mode	Withstand	Safe Fail	Safe Fail	Safe Fail	Safe Fail	Safe Fail
TOV Withstand 200 ms	(N-PE)	U_T	1200 V					
Number of Ports			1					
Mechanical & Environmental								
Operating Temperature Range		T_a	-40 ºF to +158 ºF [-40 ºC to +70 ºC]					
Permissible Operating Humidity		RH	5% to 95%					
Atmospheric Pressure and Altitude			80 kPa to 106 kPa / -500 m to 2000 m					
Terminal Screw Torque		M_{max}	39.9 lbf·in [4.5 Nm]					
Conductor Cross Section (max.)			2 AWG (Solid, Stranded) / 4 AWG (Flexible)					
			35 mm² (Solid, Stranded) / 25 mm² (Flexible)					
Mounting			35 mm DIN Rail, EN 60715					
Degree of Protection			IP20 (built-in)					
Housing Material			Thermoplastic: Extinguishing Degree UL 94 V-0					
Thermal Protection			Yes					
Operating State / Fault Indication			Green ok / Red defect					
Remote Contacts (RC)			Optional					
RC Switching Capacity			AC: 250 V / 0.5 A; DC: 250 V / 0.1 A; 125 V / 0.2 A; 75 V / 0.5 A					
RC Conductor Cross Section (max.)			16 AWG (Solid) / 1.5 mm² (Solid)					
Order Information								
Ordering Code			75	150	275	320	385	440
FLP12,5-xxx/1+1			1207513	1215013	1227513	1232013	1238513	1244013
FLP12,5-xxx/1S+1 (with remote contacts)			1207514	1215014	1227514	1232014	1238514	1244014
FLP12,5-xxx/0 (spare modules)			1207501	1215001	1227501	1232001	1238501	1244001
FLP25-255/0 (spare modules)			2525502	2525502	2525502	2525502	2525502	2525502

Internal Configuration

Legend

- L Line Conductor Terminal
- N Neutral Conductor Terminal
- ⏚ PE/G Conductor Terminal
- S Signalling Contacts Optional

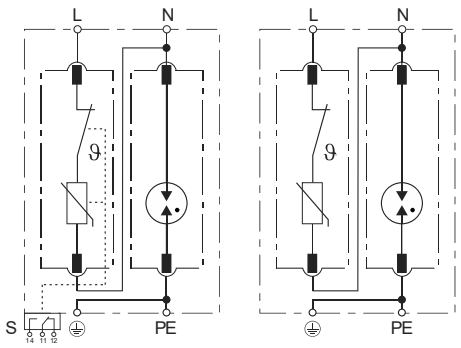

Dimensions & Packaging

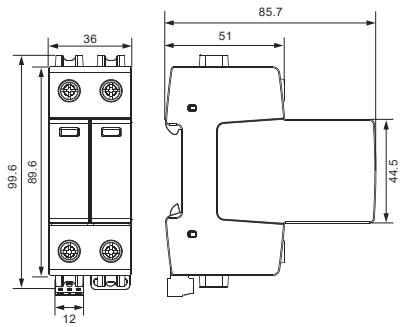

[mm]

Complete Unit						
FLP12,5-xxx/1(S)+1	75	150	275	320	385	440
DIN 43880 Dimension	1 CTN					
Packaging Dimensions (H x W x L)	[210 × 220 × 330 mm]					
Standard Order Quantity	28 Units					

Spare Plug

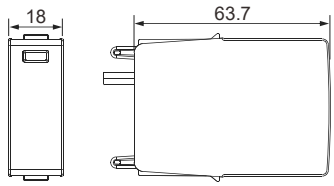

Single Unit						
FLP12,5-xxx/0	75	150	275	320	385	440
FLP25-255/0	255					
DIN 43880 Dimension	1 CTN					
Packaging Dimensions (H x W x L)	[210 × 220 × 330 mm]					
Standard Order Quantity	120 Units					

Connection Diagram

TN-S, TT (Single-phase, 1+1)

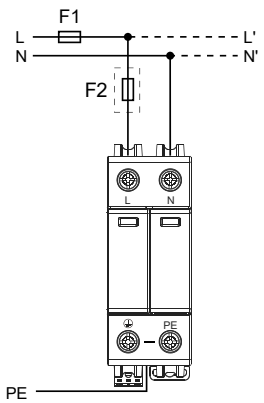

AC Surge Protective Device

FLP12,5-xxx/3(S)+1

Class I • Class II • Type 1 • Type 2

Location of Use: Main Distribution Boards
Network Systems: TT, TN-S
Mode of Protection: L-N, N-PE
Surge Ratings: I_{imp} = 12.5 kA / 50 kA (10/350 µs)
I_n = 20 kA (8/20 µs)
IEC/EN Category: Class I+II / Type 1+2
Protective Elements: High Energy MOV and GDT
Housing: Pluggable Design
Compliance: IEC 61643-11:2011
EN 61643-11:2012

Technical Data

FLP12,5-xxx/3(S)+1			150	275	320	385	440
IEC Electrical							
Nominal AC Voltage (50/60 Hz)			120 V	230 V	230 V	230 V	400 V
Maximum Continuous Operating Voltage	(L-N)	U_C	150 V	275 V	320 V	385 V	440 V
	(N-PE)	U_C			255 V		
Nominal Discharge Current (8/20 µs)	(L-N) / (N-PE)	I_n			20 kA / 50 kA		
Maximum Discharge Current (8/20 µs)	(L-N) / (N-PE)	I_{max}			50 kA / 100 kA		
Impulse Discharge Current (10/350 µs)	(L-N) / (N-PE)	I_{imp}			12.5 kA / 50 kA		
Specific Energy	(L-N) / (N-PE)	W/R			39 kJ/Ω / 625 kJ/Ω		
Charge	(L-N) / (N-PE)	Q			6.25 As / 25 As		
Voltage Protection Level	(L-N) / (N-PE)	U_p	1.0 kV / 1.5 kV	1.5 kV / 1.5 kV	1.6 kV / 1.5 kV	1.8 kV / 1.5 kV	2.0 kV / 1.5 kV
Follow Current Interrupt Rating	(N-PE)	I_{fi}			100 A_{RMS}		
Residual Current at U_C		I_{PE}			none		
Response Time	(L-N) / (N-PE)	t_A			< 25 ns / < 100 ns		
Max. Backup Fuse					160 A gL / gG		
Short-Circuit Current Rating (AC)	(L-N)	I_{SCCR}			25 kA		
TOV Withstand 5 s	(L-N)	U_T	180 V	335 V	335 V	335 V	580 V
TOV 120 min	(L-N)	U_T	230 V	440 V	440 V	440 V	765 V
		mode	Safe Fail	Safe Fail	Safe Fail	Safe Fail	Safe Fail
TOV Withstand 200 ms	(N-PE)	U_T			1200 V		
Number of Ports					1		
Mechanical & Environmental							
Operating Temperature Range		T_a			-40 ºF to +158 ºF [-40 ºC to +70 ºC]		
Permissible Operating Humidity		RH			5% to 95%		
Atmospheric Pressure and Altitude					80 kPa to 106 kPa / -500 m to 2000 m		
Terminal Screw Torque		M_{max}			39.9 lbf·in [4.5 Nm]		
Conductor Cross Section (max.)					2 AWG (Solid, Stranded) / 4 AWG (Flexible)		
					35 mm² (Solid, Stranded) / 25 mm² (Flexible)		
Mounting					35 mm DIN Rail, EN 60715		
Degree of Protection					IP20 (built-in)		
Housing Material					Thermoplastic: Extinguishing Degree UL 94 V-0		
Thermal Protection					Yes		
Operating State / Fault Indication					Green ok / Red defect		
Remote Contacts (RC)					Optional		
RC Switching Capacity					AC: 250 V / 0.5 A; DC: 250 V / 0.1 A; 125 V / 0.2 A; 75 V / 0.5 A		
RC Conductor Cross Section (max.)					16 AWG (Solid) / 1.5 mm² (Solid)		
Order Information							
Ordering Code			150	275	320	385	440
FLP12,5-xxx/3+1			1215033	1227533	1232033	1238533	1244033
FLP12,5-xxx/3S+1 (with remote contacts)			1215034	1227534	1232034	1238534	1244034
FLP12,5-xxx/0 (spare modules)			1215001	1227501	1232001	1238501	1244001
FLP50-255/0 (spare modules)			5025501	5025501	5025501	5025501	5025501

Internal Configuration

Legend

- L Line Conductor Terminal
- N Neutral Conductor Terminal
- ⏚ PE/G Conductor Terminal
- S Signalling Contacts Optional

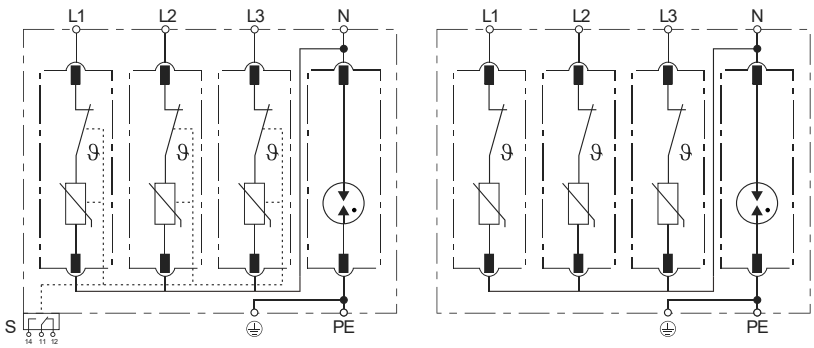

Dimensions & Packaging

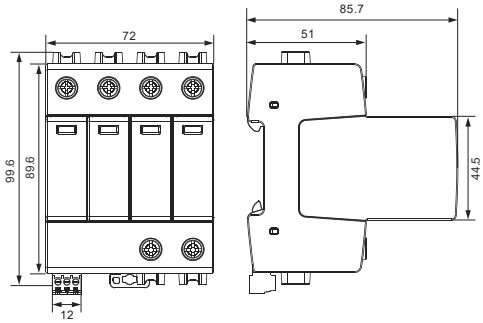

[mm]

Complete Unit					
FLP12,5-xxx/3(S)+1	150	275	320	385	440
DIN 43880 Dimension	1 CTN				
Packaging Dimensions (H x W x L)	[210 × 220 × 330 mm]				
Standard Order Quantity	16 Units				

Spare Plug

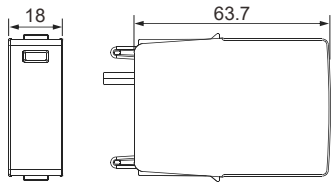

Single Unit					
FLP12,5-xxx/0	150	275	320	385	440
FLP50-255/0	255				
DIN 43880 Dimension	1 CTN				
Packaging Dimensions (H x W x L)	[210 × 220 × 330 mm]				
Standard Order Quantity	120 Units				

Connection Diagram

TN-S, TT (Three-phase, 3+1)

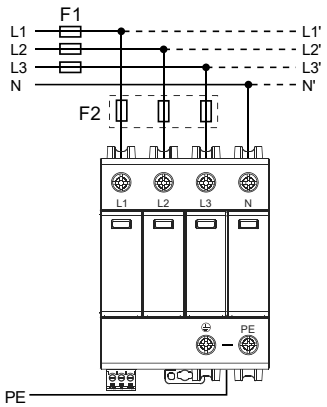

AC Surge Protective Device

FLP7-xxx/1(S)

Class I • Class II • Type 1 • Type 2

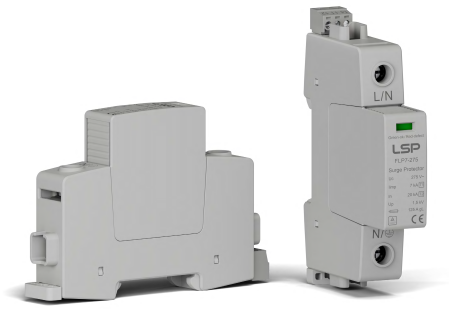

Location of Use: Main Distribution Boards
Network Systems: TN-S, TN-C, TT (only L-N)
Mode of Protection: L-PE, N-PE (only TN-S), L-PEN, L-N
Surge Ratings: I_{imp} = 7 kA (10/350 µs)
I_n = 20 kA (8/20 µs)
IEC/EN Category: Class I+II / Type 1+2
Protective Elements: High Energy MOV
Housing: Pluggable Design
Compliance: IEC 61643-11:2011
EN 61643-11:2012

Technical Data

FLP7-xxx/1(S)		75	150	275	320	385	440
IEC Electrical							
Nominal AC Voltage (50/60 Hz)	U_o / U_n	60 V	120 V	230 V	230 V	230 V	400 V
Maximum Continuous Operating Voltage (AC)	U_C	75 V	150 V	275 V	320 V	385 V	440 V
Nominal Discharge Current (8/20 µs)	I_n	20 kA	20 kA	20 kA	20 kA	20 kA	20 kA
Maximum Discharge Current (8/20 µs)	I_{max}	50 kA	50 kA	50 kA	50 kA	50 kA	50 kA
Impulse Discharge Current (10/350 µs)	I_{imp}	7 kA	7kA	7 kA	7 kA	7 kA	7 kA
Specific Energy	W/R	12 kJ/Ω	12 kJ/Ω	12 kJ/Ω	12 kJ/Ω	10 kJ/Ω	10 kJ/Ω
Charge	Q	3.5 As	3.5 As	3.5 As	3.5 As	2.5 As	2.5 As
Voltage Protection Level	U_p	400 V	1000 V	1500 V	1600 V	1800 V	2000 V
Residual Current at U_c	I_{PE}	< 0.5 mA					
Response Time	t_A	< 25 ns					
Max. Backup Fuse		160 A gL / gG					
Short-Circuit Current Rating (AC)	I_{SCCR}	25 kA					
TOV Withstand 5 s	U_T	114 V	180 V	335 V	335 V	335 V	580 V
TOV 120 min	U_T	114 V	230 V	440 V	440 V	440 V	765 V
	mode	Withstand	Safe Fail	Safe Fail	Safe Fail	Safe Fail	Safe Fail
Number of Ports		1					
Mechanical & Environmental							
Operating Temperature Range	T_a	-40 ºF to +158 ºF [-40 ºC to +70 ºC]					
Permissible Operating Humidity	RH	5% to 95%					
Atmospheric Pressure and Altitude		80 kPa to 106 kPa / -500 m to 2000 m					
Terminal Screw Torque	M_{max}	39.9 lbf·in [4.5 Nm]					
Conductor Cross Section (max.)		2 AWG (Solid, Stranded) / 4 AWG (Flexible)					
		35 mm² (Solid, Stranded) / 25 mm² (Flexible)					
Mounting		35 mm DIN Rail, EN 60715					
Degree of Protection		IP20 (built-in)					
Housing Material		Thermoplastic: Extinguishing Degree UL 94 V-0					
Thermal Protection		Yes					
Operating State / Fault Indication		Green ok / Red defect					
Remote Contacts (RC)		Optional					
RC Switching Capacity		AC: 250 V / 0.5 A; DC: 250 V / 0.1 A; 125 V / 0.2 A; 75 V / 0.5 A					
RC Conductor Cross Section (max.)		16 AWG (Solid) / 1.5 mm² (Solid)					
Order Information							
Ordering Code		75	150	275	320	385	440
FLP7-xxx/1		0707511	0715011	0727511	0732011	0738511	0744011
FLP7-xxx/1S (with remote contacts)		0707512	0715012	0727512	0732012	0738512	0744012
FLP7-xxx/0 (spare modules)		0707501	0715001	0727501	0732001	0738501	0744001

Internal Configuration

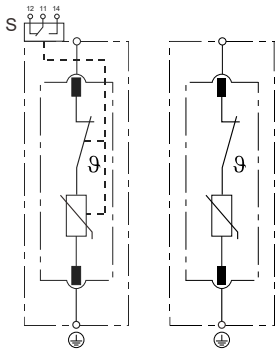

Legend

- L Line Conductor Terminal
- N Neutral Conductor Terminal
- ⏚ PE/G Conductor Terminal
- S Signalling Contacts Optional

Dimensions & Packaging

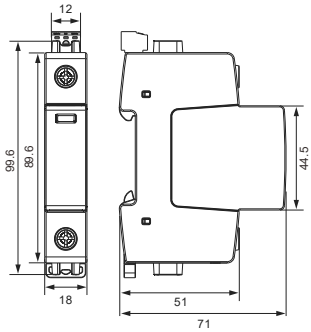

[mm]

Complete Unit						
FLP7-xxx/1(S)	75	150	275	320	385	440
DIN 43880 Dimension	1 CTN					
Packaging Dimensions (H x W x L)	[260 × 220 × 330 mm]					
Standard Order Quantity	96 Units					

Spare Plug

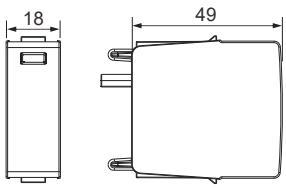

Single Unit						
FLP7-xxx/0	75	150	275	320	385	440
DIN 43880 Dimension	1 CTN					
Packaging Dimensions (H x W x L)	[260 × 220 × 330 mm]					
Standard Order Quantity	120 Units					

Connection Diagram

TN-S, TN-C, TT (Single-phase, 1+0)

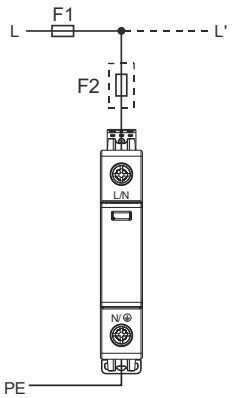

AC Surge Protective Device

FLP7-xxx/2(S)

Class I • Class II • Type 1 • Type 2

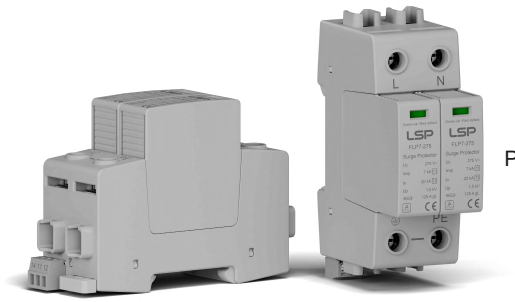

Location of Use: Main Distribution Boards
Network Systems: TN-S
Mode of Protection: L-PE, N-PE
Surge Ratings: I_{imp} = 7 kA (10/350 µs)
I_n = 20 kA (8/20 µs)
IEC/EN Category: Class I+II / Type 1+2
Protective Elements: High Energy MOV
Housing: Pluggable Design
Compliance: IEC 61643-11:2011
EN 61643-11:2012

Technical Data

FLP7-xxx/2(S)		75	150	275	320	385	440
IEC Electrical							
Nominal AC Voltage (50/60 Hz)	U_o / U_n	60 V	120 V	230 V	230 V	230 V	400 V
Maximum Continuous Operating Voltage (AC)	U_C	75 V	150 V	275 V	320 V	385 V	440 V
Nominal Discharge Current (8/20 µs)	I_n	20 kA	20 kA	20 kA	20 kA	20 kA	20 kA
Maximum Discharge Current (8/20 µs)	I_{max}	50 kA	50 kA	50 kA	50 kA	50 kA	50 kA
Impulse Discharge Current (10/350 µs)	I_{imp}	7 kA	7kA	7 kA	7 kA	7 kA	7 kA
Specific Energy	W/R	12 kJ/Ω	12 kJ/Ω	12 kJ/Ω	12 kJ/Ω	10 kJ/Ω	10 kJ/Ω
Charge	Q	3.5 As	3.5 As	3.5 As	3.5 As	2.5 As	2.5 As
Voltage Protection Level	U_p	400 V	1000 V	1500 V	1600 V	1800 V	2000 V
Residual Current at U_c	I_{PE}	< 0.5 mA					
Response Time	t_A	< 25 ns					
Max. Backup Fuse		160 A gL / gG					
Short-Circuit Current Rating (AC)	I_{SCCR}	25 kA					
TOV Withstand 5 s	U_T	114 V	180 V	335 V	335 V	335 V	580 V
TOV 120 min	U_T	114 V	230 V	440 V	440 V	440 V	765 V
	mode	Withstand	Safe Fail	Safe Fail	Safe Fail	Safe Fail	Safe Fail
Number of Ports		1					
Mechanical & Environmental							
Operating Temperature Range	T_a	-40 ºF to +158 ºF [-40 ºC to +70 ºC]					
Permissible Operating Humidity	RH	5% to 95%					
Atmospheric Pressure and Altitude		80 kPa to 106 kPa / -500 m to 2000 m					
Terminal Screw Torque	M_{max}	39.9 lbf·in [4.5 Nm]					
Conductor Cross Section (max.)		2 AWG (Solid, Stranded) / 4 AWG (Flexible)					
		35 mm² (Solid, Stranded) / 25 mm² (Flexible)					
Mounting		35 mm DIN Rail, EN 60715					
Degree of Protection		IP20 (built-in)					
Housing Material		Thermoplastic: Extinguishing Degree UL 94 V-0					
Thermal Protection		Yes					
Operating State / Fault Indication		Green ok / Red defect					
Remote Contacts (RC)		Optional					
RC Switching Capacity		AC: 250 V / 0.5 A; DC: 250 V / 0.1 A; 125 V / 0.2 A; 75 V / 0.5 A					
RC Conductor Cross Section (max.)		16 AWG (Solid) / 1.5 mm² (Solid)					
Order Information							
Ordering Code		75	150	275	320	385	440
FLP7-xxx/2		0707521	0715021	0727521	0732021	0738521	0744021
FLP7-xxx/2S (with remote contacts)		0707522	0715022	0727522	0732022	0738522	0744022
FLP7-xxx/0 (spare modules)		0707501	0715001	0727501	0732001	0738501	0744001

Internal Configuration

Legend

- L Line Conductor Terminal
- N Neutral Conductor Terminal
- ⏚ PE/G Conductor Terminal
- S Signalling Contacts Optional

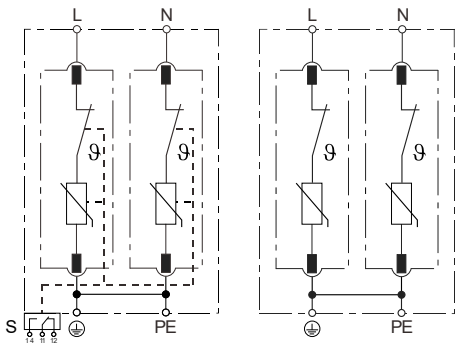

Dimensions & Packaging

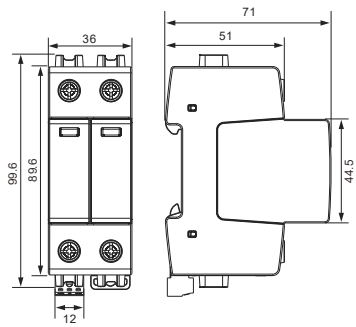

[mm]

Complete Unit						
FLP7-xxx/2(S)	75	150	275	320	385	440
DIN 43880 Dimension	1 CTN					
Packaging Dimensions (H x W x L)	[260 × 220 × 330 mm]					
Standard Order Quantity	48 Units					

Spare Plug

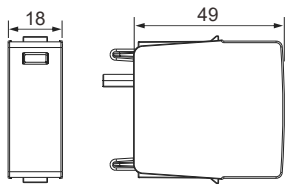

Single Unit						
FLP7-xxx/0	75	150	275	320	385	440
DIN 43880 Dimension	1 CTN					
Packaging Dimensions (H x W x L)	[260 × 220 × 330 mm]					
Standard Order Quantity	120 Units					

Connection Diagram

TN-S (Single-phase, 2+0)

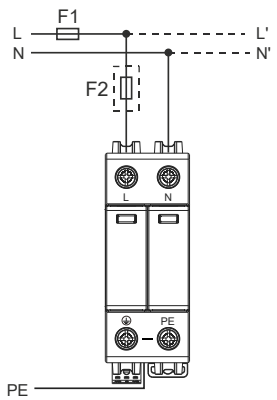

AC Surge Protective Device

FLP7-xxx/3(S)

Class I • Class II • Type 1 • Type 2

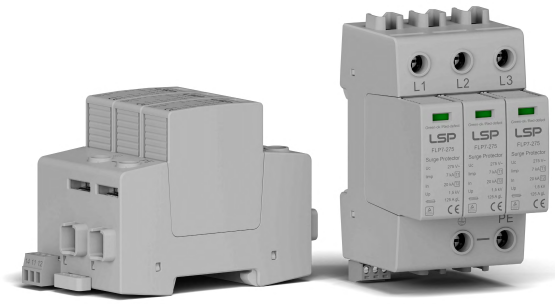

Location of Use: Main Distribution Boards
Network Systems: TN-C
Mode of Protection: L-PEN
Surge Ratings: I_{imp} = 7 kA (10/350 µs)
I_n = 20 kA (8/20 µs)
IEC/EN Category: Class I+II / Type 1+2
Protective Elements: High Energy MOV
Housing: Pluggable Design
Compliance: IEC 61643-11:2011
EN 61643-11:2012

Technical Data

FLP7-xxx/3(S)		150	275	320	385	440
IEC Electrical						
Nominal AC Voltage (50/60 Hz)	U_o / U_n	120 V	230 V	230 V	230 V	400 V
Maximum Continuous Operating Voltage (AC)	U_C	150 V	275 V	320 V	385 V	440 V
Nominal Discharge Current (8/20 µs)	I_n	20 kA	20 kA	20 kA	20 kA	20 kA
Maximum Discharge Current (8/20 µs)	I_{max}	50 kA	50 kA	50 kA	50 kA	50 kA
Impulse Discharge Current (10/350 µs)	I_{imp}	7 kA	7 kA	7 kA	7 kA	7 kA
Specific Energy	W/R	12 kJ/Ω	12 kJ/Ω	12 kJ/Ω	10 kJ/Ω	10 kJ/Ω
Charge	Q	3.5 As	3.5 As	3.5 As	2.5 As	2.5 As
Voltage Protection Level	U_p	1000 V	1500 V	1600 V	1800 V	2000 V
Residual Current at U_c	I_{PE}	< 0.5 mA				
Response Time	t_A	< 25 ns				
Max. Backup Fuse		160 A gL / gG				
Short-Circuit Current Rating (AC)	I_{SCCR}	25 kA				
TOV Withstand 5 s	U_T	180 V	335 V	335 V	335 V	580 V
TOV 120 min	U_T	230 V	440 V	440 V	440 V	765 V
	mode	Safe Fail	Safe Fail	Safe Fail	Safe Fail	Safe Fail
Number of Ports		1				
Mechanical & Environmental						
Operating Temperature Range	T_a	-40 ºF to +158 ºF [-40 ºC to +70 ºC]				
Permissible Operating Humidity	RH	5% to 95%				
Atmospheric Pressure and Altitude		80 kPa to 106 kPa / -500 m to 2000 m				
Terminal Screw Torque	M_{max}	39.9 lbf·in [4.5 Nm]				
Conductor Cross Section (max.)		2 AWG (Solid, Stranded) / 4 AWG (Flexible)				
		35 mm² (Solid, Stranded) / 25 mm² (Flexible)				
Mounting		35 mm DIN Rail, EN 60715				
Degree of Protection		IP20 (built-in)				
Housing Material		Thermoplastic: Extinguishing Degree UL 94 V-0				
Thermal Protection		Yes				
Operating State / Fault Indication		Green ok / Red defect				
Remote Contacts (RC)		Optional				
RC Switching Capacity		AC: 250 V / 0.5 A; DC: 250 V / 0.1 A; 125 V / 0.2 A; 75 V / 0.5 A				
RC Conductor Cross Section (max.)		16 AWG (Solid) / 1.5 mm² (Solid)				
Order Information						
Ordering Code		150	275	320	385	440
FLP7-xxx/3		0715031	0727531	0732031	0738531	0744031
FLP7-xxx/3S (with remote contacts)		0715032	0727532	0732032	0738532	0744032
FLP7-xxx/0 (spare modules)		0715001	0727501	0732001	0738501	0744001

FLP7-xxx/3(S)

Internal Configuration

Legend

- L Line Conductor Terminal
- N Neutral Conductor Terminal
- ⏚ PE/G Conductor Terminal
- S Signalling Contacts Optional

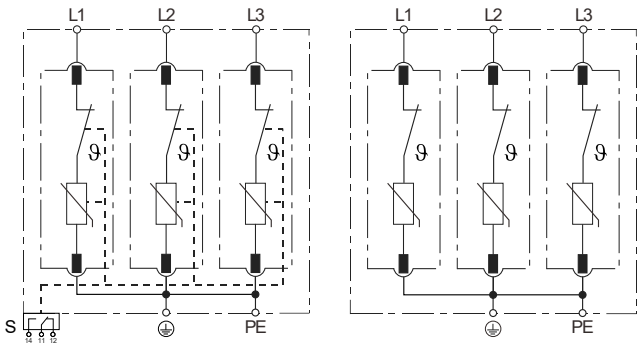

Dimensions & Packaging

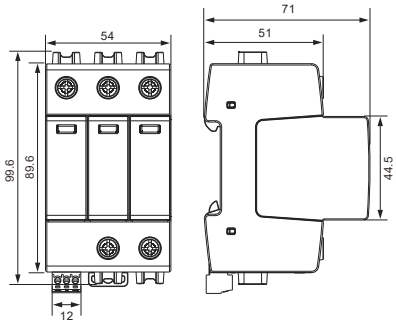

[mm]

Complete Unit					
FLP7-xxx/3(S)	150	275	320	385	440
DIN 43880 Dimension	1 CTN				
Packaging Dimensions (H x W x L)	[260 × 220 × 330 mm]				
Standard Order Quantity	30 Units				

Spare Plug

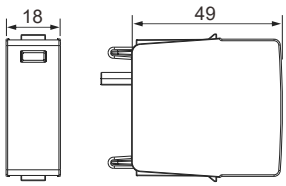

Single Unit					
FLP7-xxx/0	150	275	320	385	440
DIN 43880 Dimension	1 CTN				
Packaging Dimensions (H x W x L)	[260 × 220 × 330 mm]				
Standard Order Quantity	120 Units				

Connection Diagram

TN-C (Three-phase, 3+0)

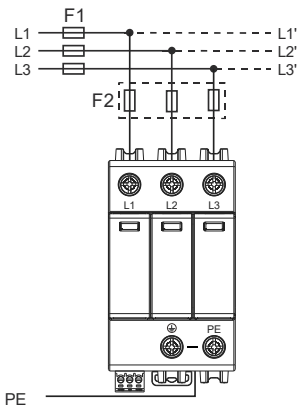

AC Surge Protective Device

FLP7-xxx/4(S)

Class I • Class II • Type 1 • Type 2

Location of Use: Main Distribution Boards
Network Systems: TN-S
Mode of Protection: L-PE, N-PE
Surge Ratings: I_{imp} = 7 kA (10/350 µs)
I_n = 20 kA (8/20 µs)
IEC/EN Category: Class I+II / Type 1+2
Protective Elements: High Energy MOV
Housing: Pluggable Design
Compliance: IEC 61643-11:2011
EN 61643-11:2012

Technical Data

FLP7-xxx/4(S)		150	275	320	385	440
IEC Electrical						
Nominal AC Voltage (50/60 Hz)	U_o / U_n	120 V	230 V	230 V	230 V	400 V
Maximum Continuous Operating Voltage (AC)	U_C	150 V	275 V	320 V	385 V	440 V
Nominal Discharge Current (8/20 µs)	I_n	20 kA	20 kA	20 kA	20 kA	20 kA
Maximum Discharge Current (8/20 µs)	I_{max}	50 kA	50 kA	50 kA	50 kA	50 kA
Impulse Discharge Current (10/350 µs)	I_{imp}	7 kA	7 kA	7 kA	7 kA	7 kA
Specific Energy	W/R	12 kJ/Ω	12 kJ/Ω	12 kJ/Ω	10 kJ/Ω	10 kJ/Ω
Charge	Q	3.5 As	3.5 As	3.5 As	2.5 As	2.5 As
Voltage Protection Level	U_p	1000 V	1500 V	1600 V	1800 V	2000 V
Residual Current at U_c	I_{PE}	< 0.5 mA				
Response Time	t_A	< 25 ns				
Max. Backup Fuse		160 A gL / gG				
Short-Circuit Current Rating (AC)	I_{SCCR}	25 kA				
TOV Withstand 5 s	U_T	180 V	335 V	335 V	335 V	580 V
TOV 120 min	U_T	230 V	440 V	440 V	440 V	765 V
	mode	Safe Fail	Safe Fail	Safe Fail	Safe Fail	Safe Fail
Number of Ports		1				
Mechanical & Environmental						
Operating Temperature Range	T_a	-40 ºF to +158 ºF [-40 ºC to +70 ºC]				
Permissible Operating Humidity	RH	5% to 95%				
Atmospheric Pressure and Altitude		80 kPa to 106 kPa / -500 m to 2000 m				
Terminal Screw Torque	M_{max}	39.9 lbf·in [4.5 Nm]				
Conductor Cross Section (max.)		2 AWG (Solid, Stranded) / 4 AWG (Flexible)				
		35 mm² (Solid, Stranded) / 25 mm² (Flexible)				
Mounting		35 mm DIN Rail, EN 60715				
Degree of Protection		IP20 (built-in)				
Housing Material		Thermoplastic: Extinguishing Degree UL 94 V-0				
Thermal Protection		Yes				
Operating State / Fault Indication		Green ok / Red defect				
Remote Contacts (RC)		Optional				
RC Switching Capacity		AC: 250 V / 0.5 A; DC: 250 V / 0.1 A; 125 V / 0.2 A; 75 V / 0.5 A				
RC Conductor Cross Section (max.)		16 AWG (Solid) / 1.5 mm² (Solid)				
Order Information						
Ordering Code		150	275	320	385	440
FLP7-xxx/4		0715041	0727541	0732041	0738541	0744041
FLP7-xxx/4S (with remote contacts)		0715042	0727542	0732042	0738542	0744042
FLP7-xxx/0 (spare modules)		0715001	0727501	0732001	0738501	0744001

Internal Configuration

Legend

- L Line Conductor Terminal
- N Neutral Conductor Terminal
- ⏚ PE/G Conductor Terminal
- S Signalling Contacts Optional

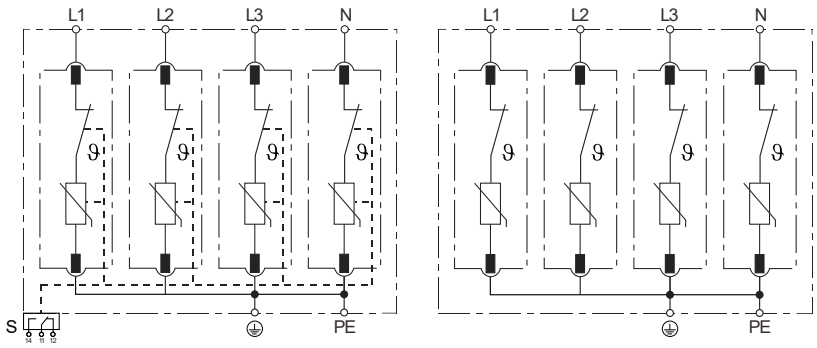

Dimensions & Packaging

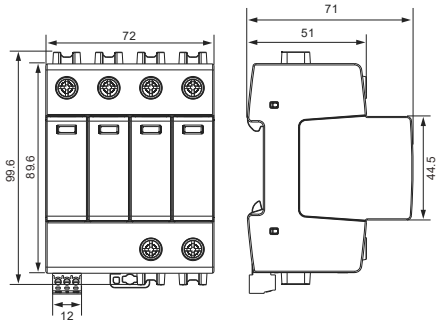

[mm]

Complete Unit					
FLP7-xxx/4(S)	150	275	320	385	440
DIN 43880 Dimension	1 CTN				
Packaging Dimensions (H x W x L)	[260 × 220 × 330 mm]				
Standard Order Quantity	24 Units				

Spare Plug

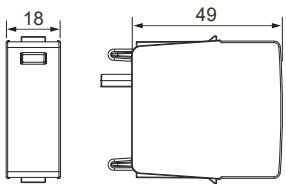

Single Unit					
FLP7-xxx/0	150	275	320	385	440
DIN 43880 Dimension	1 CTN				
Packaging Dimensions (H x W x L)	[260 × 220 × 330 mm]				
Standard Order Quantity	120 Units				

Connection Diagram

TN-S (Three-phase, 4+0)

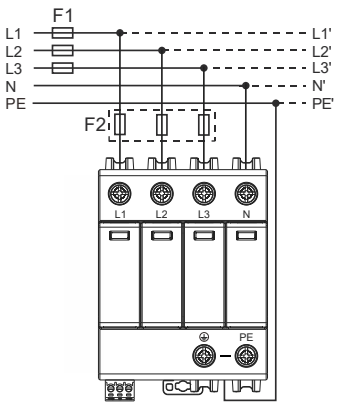

AC Surge Protective Device

FLP7-xxx/1(S)+1

Class I • Class II • Type 1 • Type 2

Location of Use: Main Distribution Boards
Network Systems: TT, TN-S
Mode of Protection: L-N, N-PE
Surge Ratings: I_{imp} = 7 kA / 15 kA (10/350 µs)
I_n = 20 kA (8/20 µs)
IEC/EN Category: Class I+II / Type 1+2
Protective Elements: High Energy MOV and GDT
Housing: Pluggable Design
Compliance: IEC 61643-11:2011
EN 61643-11:2012

Technical Data

FLP7-xxx/1(S)+1			75	150	275	320	385	440
IEC Electrical								
Nominal AC Voltage (50/60 Hz)			60 V	120 V	230 V	230 V	230 V	400 V
Maximum Continuous Operating Voltage	(L-N)	U_C	75 V	150 V	275 V	320 V	385 V	440 V
	(N-PE)	U_C	255 V					
Nominal Discharge Current (8/20 µs)	(L-N) / (N-PE)	I_n	20 kA / 20 kA					
Maximum Discharge Current (8/20 µs)	(L-N) / (N-PE)	I_{max}	50 kA / 50 kA					
Impulse Discharge Current (10/350 µs)	(L-N) / (N-PE)	I_{imp}	7 kA / 15 kA					
Specific Energy	(L-N) / (N-PE)	W/R	12 kJ/Ω / 46 kJ/Ω					
Charge	(L-N) / (N-PE)	Q	3.5 As / 7.5 As					
Voltage Protection Level	(L-N) / (N-PE)	U_p	0.7 kV / 1.5 kV	1.0 kV / 1.5 kV	1.5 kV / 1.5 kV	1.6 kV / 1.5 kV	1.8 kV / 1.5 kV	2.0 kV / 1.5 kV
Follow Current Interrupt Rating	(N-PE)	I_{fi}	100 A_{RMS}					
Residual Current at U_C		I_{PE}	none					
Response Time	(L-N) / (N-PE)	t_A	< 25 ns / < 100 ns					
Max. Backup Fuse			160 A gL / gG					
Short-Circuit Current Rating (AC)	(L-N)	I_{SCCR}	25 kA					
TOV Withstand 5 s	(L-N)	U_T	114 V	180 V	335 V	335 V	335 V	580 V
TOV 120 min	(L-N)	U_T	114 V	230 V	440 V	440 V	440 V	765 V
		mode	Withstand	Safe Fail	Safe Fail	Safe Fail	Safe Fail	Safe Fail
TOV Withstand 200 ms	(N-PE)	U_T	1200 V					
Number of Ports			1					
Mechanical & Environmental								
Operating Temperature Range		T_a	-40 ºF to +158 ºF [-40 ºC to +70 ºC]					
Permissible Operating Humidity		RH	5% to 95%					
Atmospheric Pressure and Altitude			80 kPa to 106 kPa / -500 m to 2000 m					
Terminal Screw Torque		M_{max}	39.9 lbf·in [4.5 Nm]					
Conductor Cross Section (max.)			2 AWG (Solid, Stranded) / 4 AWG (Flexible)					
			35 mm² (Solid, Stranded) / 25 mm² (Flexible)					
Mounting			35 mm DIN Rail, EN 60715					
Degree of Protection			IP20 (built-in)					
Housing Material			Thermoplastic: Extinguishing Degree UL 94 V-0					
Thermal Protection			Yes					
Operating State / Fault Indication			Green ok / Red defect					
Remote Contacts (RC)			Optional					
RC Switching Capacity			AC: 250 V / 0.5 A; DC: 250 V / 0.1 A; 125 V / 0.2 A; 75 V / 0.5 A					
RC Conductor Cross Section (max.)			16 AWG (Solid) / 1.5 mm² (Solid)					
Order Information								
Ordering Code			75	150	275	320	385	440
FLP7-xxx/1+1			1707513	0715013	0727513	0732013	0738513	0744013
FLP7-xxx/1S+1 (with remote contacts)			1707514	0715014	0727514	0732014	0738514	0744014
FLP7-xxx/0 (spare modules)			0707501	0715001	0727501	0732001	0738501	0744001
FLP15-255/0 (spare modules)			1525502	1525501	1525501	1525501	1525501	1525501

Internal Configuration

Legend

- L Line Conductor Terminal
- N Neutral Conductor Terminal
- ⏚ PE/G Conductor Terminal
- S Signalling Contacts Optional

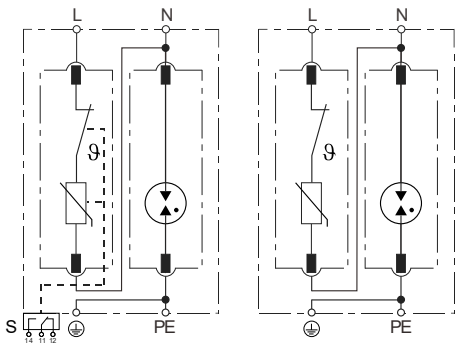

Dimensions & Packaging

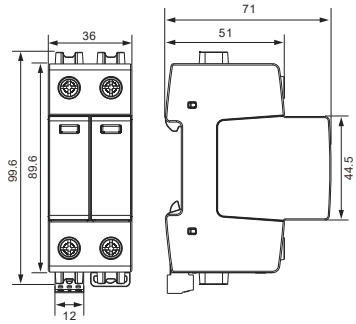

[mm]

Complete Unit						
FLP7-xxx/1(S)+1	75	150	275	320	385	440
DIN 43880 Dimension	1 CTN					
Packaging Dimensions (H x W x L)	[260 × 220 × 330 mm]					
Standard Order Quantity	48 Units					

Spare Plug

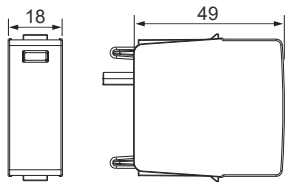

Single Unit						
FLP7-xxx/0	75	150	275	320	385	440
FLP15-255/0	255					
DIN 43880 Dimension	1 CTN					
Packaging Dimensions (H x W x L)	[260 × 220 × 330 mm]					
Standard Order Quantity	120 Units					

Connection Diagram

TN-S, TT (Single-phase, 1+1)

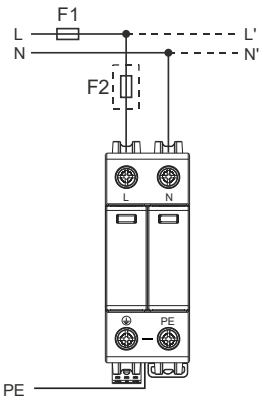

AC Surge Protective Device

FLP7-xxx/3(S)+1

Class I • Class II • Type 1 • Type 2

Location of Use: Main Distribution Boards
Network Systems: TT, TN-S
Mode of Protection: L-N, N-PE
Surge Ratings: I_{imp} = 7 kA / 25kA (10/350 µs)
I_n = 20 kA (8/20 µs)
IEC/EN Category: Class I+II / Type 1+2
Protective Elements: High Energy MOV and GDT
Housing: Pluggable Design
Compliance: IEC 61643-11:2011
EN 61643-11:2012

Technical Data

FLP7-xxx/3(S)+1			150	275	320	385	440
IEC Electrical							
Nominal AC Voltage (50/60 Hz)			120 V	230 V	230 V	230 V	400 V
Maximum Continuous Operating Voltage	(L-N)	U_C	150 V	275 V	320 V	385 V	440 V
	(N-PE)	U_C			255 V		
Nominal Discharge Current (8/20 µs)	(L-N) / (N-PE)	I_n			20 kA / 20 kA		
Maximum Discharge Current (8/20 µs)	(L-N) / (N-PE)	I_{max}			50 kA / 50 kA		
Impulse Discharge Current (10/350 µs)	(L-N) / (N-PE)	I_{imp}			7 kA / 25 kA		
Specific Energy	(L-N) / (N-PE)	W/R			12 kJ/Ω / 156 kJ/Ω		
Charge	(L-N) / (N-PE)	Q			3.5 As / 12.5 As		
Voltage Protection Level	(L-N) / (N-PE)	U_p	1.0 kV / 1.5 kV	1.5 kV / 1.5 kV	1.6 kV / 1.5 kV	1.8 kV / 1.5 kV	2.0 kV / 1.5 kV
Follow Current Interrupt Rating	(N-PE)	I_{fi}			100 A_{RMS}		
Response Time		t_A			< 25 ns / < 100 ns		
Max. Backup Fuse	(L-N) / (N-PE)				160 A gL / gG		
Short-Circuit Current Rating (AC)		I_{SCCR}			25 kA		
TOV Withstand 5 s	(L-N)	U_T	180 V	335 V	335 V	335 V	580 V
TOV 120 min	(L-N)	U_T	230 V	440 V	440 V	440 V	765 V
	(L-N)	mode	Safe Fail	Safe Fail	Safe Fail	Safe Fail	Safe Fail
TOV Withstand 200 ms		U_T			1200 V		
Number of Ports	(N-PE)				1		
Mechanical & Environmental							
Operating Temperature Range		T_a			-40 ºF to +158 ºF [-40 ºC to +70 ºC]		
Permissible Operating Humidity		RH			5% to 95%		
Atmospheric Pressure and Altitude					80 kPa to 106 kPa / -500 m to 2000 m		
Terminal Screw Torque		M_{max}			39.9 lbf·in [4.5 Nm]		
Conductor Cross Section (max.)					2 AWG (Solid, Stranded) / 4 AWG (Flexible)		
					35 mm² (Solid, Stranded) / 25 mm² (Flexible)		
Mounting					35 mm DIN Rail, EN 60715		
Degree of Protection					IP20 (built-in)		
Housing Material					Thermoplastic: Extinguishing Degree UL 94 V-0		
Thermal Protection					Yes		
Operating State / Fault Indication					Green ok / Red defect		
Remote Contacts (RC)					Optional		
RC Switching Capacity					AC: 250 V / 0.5 A; DC: 250 V / 0.1 A; 125 V / 0.2 A; 75 V / 0.5 A		
RC Conductor Cross Section (max.)					16 AWG (Solid) / 1.5 mm² (Solid)		
Order Information							
Ordering Code			150	275	320	385	440
FLP7-xxx/3+1			0715033	0727533	0732033	0738533	0744033
FLP7-xxx/3S+1 (with remote contacts)			0715034	0727534	0732034	0738534	0744034
FLP7-xxx/0 (spare modules)			0715001	0727501	0732001	0738501	0744001
FLP25-255/0 (spare modules)			2525501	2525501	2525501	2525501	2525501

Internal Configuration

Legend

- L Line Conductor Terminal
- N Neutral Conductor Terminal
- ⏚ PE/G Conductor Terminal
- S Signalling Contacts Optional

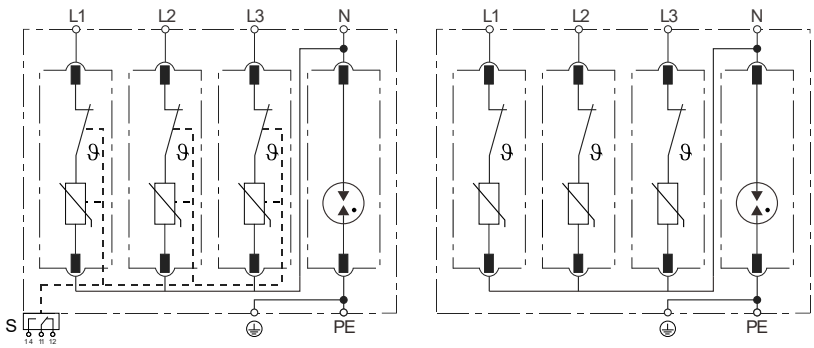

Dimensions & Packaging

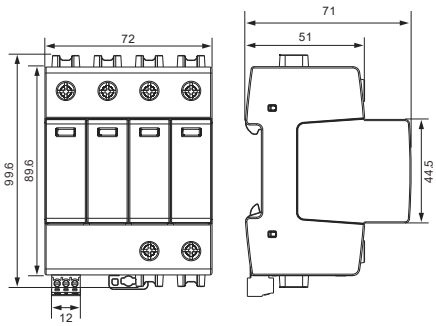

[mm]

Complete Unit					
FLP7-xxx/3(S)	150	275	320	385	440
DIN 43880 Dimension	1 CTN				
Packaging Dimensions (H x W x L)	[260 × 220 × 330 mm]				
Standard Order Quantity	24 Units				

Spare Plug

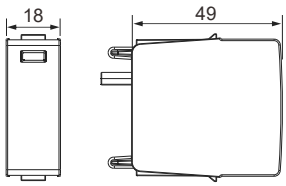

Single Unit					
FLP7-xxx/0	150	275	320	385	440
FLP25-255/0	255				
DIN 43880 Dimension	1 CTN				
Packaging Dimensions (H x W x L)	[260 × 220 × 330 mm]				
Standard Order Quantity	120 Units				

Connection Diagram

TN-S, TT (Three-phase, 3+1)

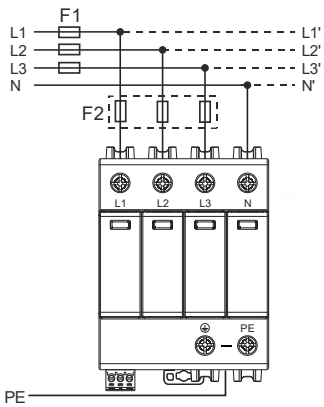

AC Surge Protective Device

SLP40-xxx/1(S)

Class II • Type 2

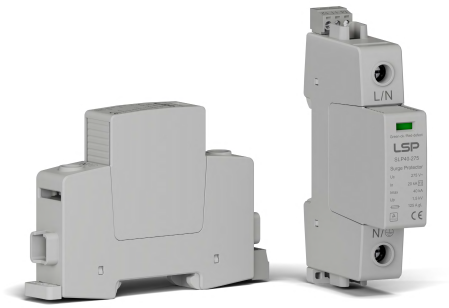

Location of Use: Sub-Distribution Boards
Network Systems: TN-S, TN-C, TT (only L-N)
Mode of Protection: L-PE, N-PE (only TN-S), L-PEN, L-N
Surge Ratings: I_n = 20 kA (8/20 µs)
IEC/EN Category: Class II / Type 2
Protective Elements: High Energy MOV
Housing: Pluggable Design
Compliance: IEC 61643-11:2011
EN 61643-11:2012

Technical Data

SLP40-xxx/1(S)		75	150	275	320	385	440
IEC Electrical							
Nominal AC Voltage (50/60 Hz)	U_o / U_n	60 V	120 V	230 V	230 V	230 V	400 V
Maximum Continuous Operating Voltage (AC)	U_C	75 V	150 V	275 V	320 V	385 V	440 V
Nominal Discharge Current (8/20 µs)	I_n	20 kA	20 kA	20 kA	20 kA	20 kA	20 kA
Maximum Discharge Current (8/20 µs)	I_{max}	40 kA	40 kA	40 kA	40 kA	40 kA	40 kA
Voltage Protection Level	U_p	400 V	1000 V	1500 V	1600 V	1800 V	2000 V
Residual Current at U_c	I_{PE}	< 0.5 mA					
Response Time	t_A	< 25 ns					
Max. Backup Fuse		160 A gL / gG					
Short-Circuit Current Rating (AC)	I_{SCCR}	25 kA					
TOV Withstand 5 s	U_T	90 V	180 V	335 V	335 V	335 V	580 V
TOV 120 min	U_T	115 V	230 V	440 V	440 V	440 V	765 V
	mode	Withstand	Withstand	Safe Fail	Safe Fail	Safe Fail	Safe Fail
Number of Ports		1					
Mechanical & Environmental							
Operating Temperature Range	T_a	-40 ºF to +158 ºF [-40 ºC to +70 ºC]					
Permissible Operating Humidity	RH	5% to 95%					
Atmospheric Pressure and Altitude		80 kPa to 106 kPa / -500 m to 2000 m					
Terminal Screw Torque	M_{max}	39.9 lbf·in [4.5 Nm]					
Conductor Cross Section (max.)		2 AWG (Solid, Stranded) / 4 AWG (Flexible)					
		35 mm² (Solid, Stranded) / 25 mm² (Flexible)					
Mounting		35 mm DIN Rail, EN 60715					
Degree of Protection		IP20 (built-in)					
Housing Material		Thermoplastic: Extinguishing Degree UL 94 V-0					
Thermal Protection		Yes					
Operating State / Fault Indication		Green ok / Red defect					
Remote Contacts (RC)		Optional					
RC Switching Capacity		AC: 250 V / 0.5 A; DC: 250 V / 0.1 A; 125 V / 0.2 A; 75 V / 0.5 A					
RC Conductor Cross Section (max.)		16 AWG (Solid) / 1.5 mm² (Solid)					
Order Information							
Ordering Code		75	150	275	320	385	440
SLP40-xxx/1		4007511	4015011	4027511	4032011	4038511	4044011
SLP40-xxx/1S (with remote contacts)		4007512	4015012	4027512	4032012	4038512	4044012
SLP40-xxx/0 (spare modules)		4007501	4015001	4027501	4032001	4038501	4044001

SLP40-xxx/1(S)

Internal Configuration

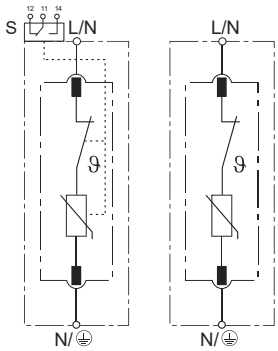

Legend

- L Line Conductor Terminal
- N Neutral Conductor Terminal
- ⏚ PE/G Conductor Terminal
- S Signalling Contacts Optional

Dimensions & Packaging

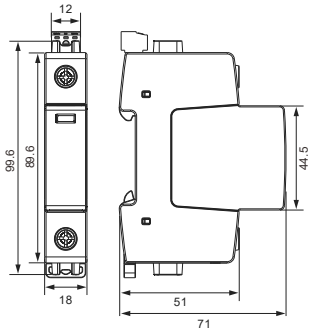

[mm]

Complete Unit						
SLP40-xxx/1(S)	75	150	275	320	385	440
DIN 43880 Dimension	1 CTN					
Packaging Dimensions (H x W x L)	[260 × 220 × 330 mm]					
Standard Order Quantity	96 Units					

Spare Plug

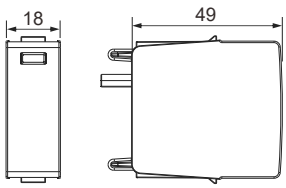

Single Unit						
SLP40-xxx/0	75	150	275	320	385	440
DIN 43880 Dimension	1 CTN					
Packaging Dimensions (H x W x L)	[260 × 220 × 330 mm]					
Standard Order Quantity	120 Units					

Connection Diagram

TN-S, TN-C, TT (Single-phase, 1+0)

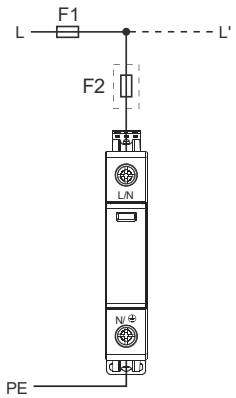

AC Surge Protective Device

SLP40-xxx/2(S)

Class II • Type 2

Location of Use: Sub-Distribution Boards
Network Systems: TN-S
Mode of Protection: L-PE, N-PE
Surge Ratings: I_n = 20 kA (8/20 µs)
IEC/EN/UL Category: Class II / Type 2
Protective Elements: High Energy MOV
Housing: Pluggable Design
Compliance: IEC 61643-11:2011
EN 61643-11:2012

Technical Data

SLP40-xxx/2(S)		75	150	275	320	385	440
IEC Electrical							
Nominal AC Voltage (50/60 Hz)	U_o / U_n	60 V	120 V	230 V	230 V	230 V	400 V
Maximum Continuous Operating Voltage (AC)	U_C	75 V	150 V	275 V	320 V	385 V	440 V
Nominal Discharge Current (8/20 µs)	I_n	20 kA	20 kA	20 kA	20 kA	20 kA	20 kA
Maximum Discharge Current (8/20 µs)	I_{max}	40 kA	40 kA	40 kA	40 kA	40 kA	40 kA
Voltage Protection Level	U_p	400 V	1000 V	1500 V	1600 V	1800 V	2000 V
Residual Current at U_c	I_{PE}	< 0.5 mA					
Response Time	t_A	< 25 ns					
Max. Backup Fuse		125 A gL / gG					
Short-Circuit Current Rating (AC)	I_{SCCR}	25 kA					
TOV Withstand 5 s	U_T	90 V	180 V	335 V	335 V	335 V	580 V
TOV 120 min	U_T	115 V	230 V	440 V	440 V	440 V	765 V
	mode	Withstand	Withstand	Safe Fail	Safe Fail	Safe Fail	Safe Fail
Number of Ports		1					
Mechanical & Environmental							
Operating Temperature Range	T_a	-40 ºF to +158 ºF [-40 ºC to +70 ºC]					
Permissible Operating Humidity	RH	5% to 95%					
Atmospheric Pressure and Altitude		80 kPa to 106 kPa / -500 m to 2000 m					
Terminal Screw Torque	M_{max}	39.9 lbf·in [4.5 Nm]					
Conductor Cross Section (max.)		2 AWG (Solid, Stranded) / 4 AWG (Flexible)					
		35 mm² (Solid, Stranded) / 25 mm² (Flexible)					
Mounting		35 mm DIN Rail, EN 60715					
Degree of Protection		IP20 (built-in)					
Housing Material		Thermoplastic: Extinguishing Degree UL 94 V-0					
Thermal Protection		Yes					
Operating State / Fault Indication		Green ok / Red defect					
Remote Contacts (RC)		Optional					
RC Switching Capacity		AC: 250 V / 0.5 A; DC: 250 V / 0.1 A; 125 V / 0.2 A; 75 V / 0.5 A					
RC Conductor Cross Section (max.)		16 AWG (Solid) / 1.5 mm² (Solid)					
Order Information							
Ordering Code		75	150	275	320	385	440
SLP40-xxx/2		4007521	4015021	4027521	4032021	4038521	4044021
SLP40-xxx/2S (with remote contacts)		4007522	4015022	4027522	4032022	4038522	4044022
SLP40-xxx/0 (spare modules)		4007501	4015001	4027501	4032001	4038501	4044001

Internal Configuration

Legend

- L Line Conductor Terminal
- N Neutral Conductor Terminal
- ⏚ PE/G Conductor Terminal
- S Signalling Contacts Optional

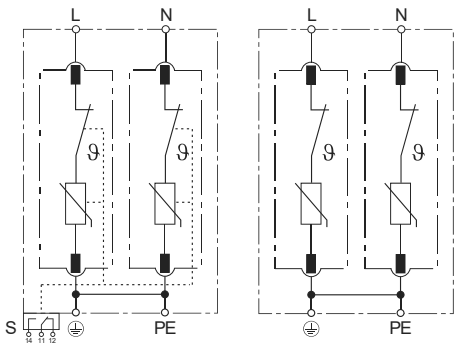

Dimensions & Packaging

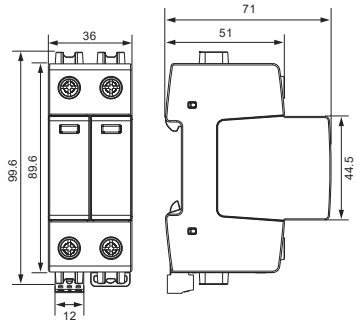

[mm]

Complete Unit						
SLP40-xxx/2(S)	75	150	275	320	385	440
DIN 43880 Dimension	1 CTN					
Packaging Dimensions (H x W x L)	[260 × 220 × 330 mm]					
Standard Order Quantity	48 Units					

Spare Plug

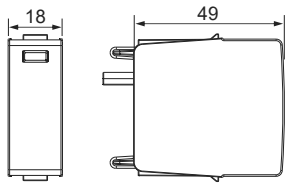

Single Unit						
SLP40-xxx/0	75	150	275	320	385	440
DIN 43880 Dimension	1 CTN					
Packaging Dimensions (H x W x L)	[260 × 220 × 330 mm]					
Standard Order Quantity	120 Units					

Connection Diagram

TN-S (Single-phase, 2+0)

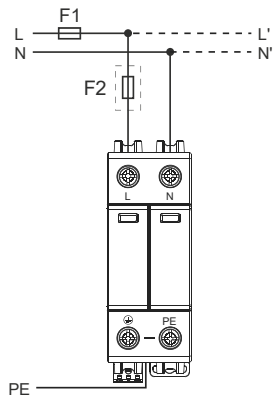

AC Surge Protective Device

SLP40-xxx/3(S)

Class II • Type 2

Location of Use: Sub-Distribution Boards
Network Systems: TN-C
Mode of Protection: L-PEN
Surge Ratings: I_n = 20 kA (8/20 µs)
IEC/EN Category: Class II / Type 2
Protective Elements: High Energy MOV
Housing: Pluggable Design
Compliance: IEC 61643-11:2011
EN 61643-11:2012

Technical Data

SLP40-xxx/3(S)		150	275	320	385	440
IEC Electrical						
Nominal AC Voltage (50/60 Hz)	U_o / U_n	120 V	230 V	230 V	230 V	400 V
Maximum Continuous Operating Voltage (AC)	U_C	150 V	275 V	320 V	385 V	440 V
Nominal Discharge Current (8/20 µs)	I_n	20 kA	20 kA	20 kA	20 kA	20 kA
Maximum Discharge Current (8/20 µs)	I_{max}	40 kA	40 kA	40 kA	40 kA	40 kA
Voltage Protection Level	U_p	1000 V	1500 V	1600 V	1800 V	2000 V
Residual Current at U_c	I_{PE}	< 0.5 mA				
Response Time	t_A	< 25 ns				
Max. Backup Fuse		125 A gL / gG				
Short-Circuit Current Rating (AC)	I_{SCCR}	25 kA				
TOV Withstand 5 s	U_T	180 V	335 V	335 V	335 V	580 V
TOV 120 min	U_T	230 V	440 V	440 V	440 V	765 V
	mode	Safe Fail	Safe Fail	Safe Fail	Safe Fail	Safe Fail
Number of Ports		1				
Mechanical & Environmental						
Operating Temperature Range	T_a	-40 ºF to +158 ºF [-40 ºC to +70 ºC]				
Permissible Operating Humidity	RH	5% to 95%				
Atmospheric Pressure and Altitude		80 kPa to 106 kPa / -500 m to 2000 m				
Terminal Screw Torque	M_{max}	39.9 lbf·in [4.5 Nm]				
Conductor Cross Section (max.)		2 AWG (Solid, Stranded) / 4 AWG (Flexible)				
		35 mm² (Solid, Stranded) / 25 mm² (Flexible)				
Mounting		35 mm DIN Rail, EN 60715				
Degree of Protection		IP20 (built-in)				
Housing Material		Thermoplastic: Extinguishing Degree UL 94 V-0				
Thermal Protection		Yes				
Operating State / Fault Indication		Green ok / Red defect				
Remote Contacts (RC)		Optional				
RC Switching Capacity		AC: 250 V / 0.5 A; DC: 250 V / 0.1 A; 125 V / 0.2 A; 75 V / 0.5 A				
RC Conductor Cross Section (max.)		16 AWG (Solid) / 1.5 mm² (Solid)				
Order Information						
Ordering Code		150	275	320	385	440
FLP40-xxx/3		4015031	4027531	4032031	4038531	4044031
FLP40-xxx/3S (with remote contacts)		4015032	4027532	4032032	4038532	4044032
FLP40-xxx/0 (spare modules)		4015001	4027501	4032001	4038501	4044001

SLP40-xxx/3(S)

Internal Configuration

Legend

- L Line Conductor Terminal
- N Neutral Conductor Terminal
- ⏚ PE/G Conductor Terminal
- S Signalling Contacts Optional

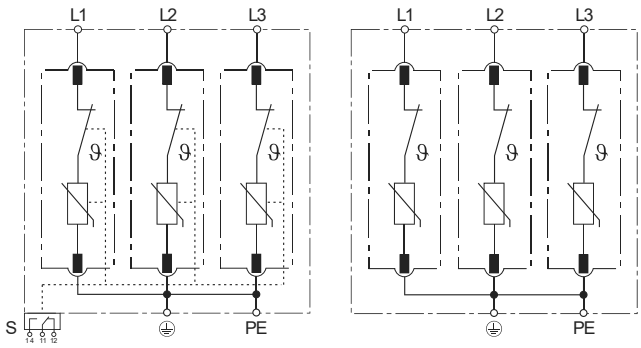

Dimensions & Packaging

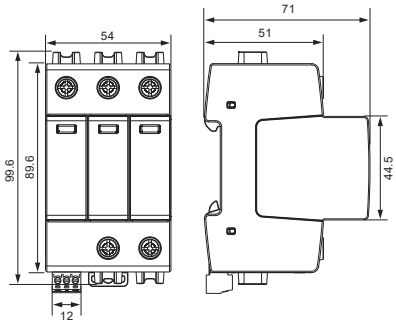

[mm]

Complete Unit					
SLP40-xxx/3(S)	150	275	320	385	440
DIN 43880 Dimension	1 CTN				
Packaging Dimensions (H x W x L)	[260 × 220 × 330 mm]				
Standard Order Quantity	30 Units				

Spare Plug

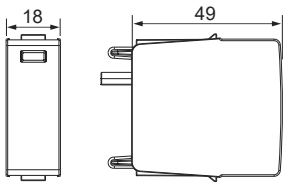

Single Unit					
SLP40-xxx/0	150	275	320	385	440
DIN 43880 Dimension	1 CTN				
Packaging Dimensions (H x W x L)	[260 × 220 × 330 mm]				
Standard Order Quantity	120 Units				

Connection Diagram

TN-C (Three-phase, 3+0)

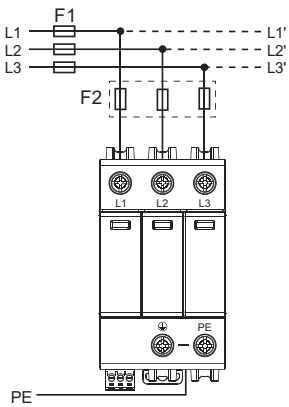

AC Surge Protective Device

SLP40-xxx/4(S)

Class II • Type 2

Location of Use: Sub-Distribution Boards
Network Systems: TN-S
Mode of Protection: L-PE, N-PE
Surge Ratings: I_n = 20 kA (8/20 µs)
IEC/EN Category: Class II / Type 2
Protective Elements: High Energy MOV
Housing: Pluggable Design
Compliance: IEC 61643-11:2011
EN 61643-11:2012

Technical Data

SLP40-xxx/4(S)		150	275	320	385	440
IEC Electrical						
Nominal AC Voltage (50/60 Hz)	U_o / U_n	120 V	230 V	230 V	230 V	400 V
Maximum Continuous Operating Voltage (AC)	U_C	150 V	275 V	320 V	385 V	440 V
Nominal Discharge Current (8/20 µs)	I_n	20 kA	20 kA	20 kA	20 kA	20 kA
Maximum Discharge Current (8/20 µs)	I_{max}	40 kA	40 kA	40 kA	40 kA	40 kA
Voltage Protection Level	U_p	1000 V	1500 V	1600 V	1800 V	2000 V
Residual Current at U_c	I_{PE}	< 0.5 mA				
Response Time	t_A	< 25 ns				
Max. Backup Fuse		125 A gL / gG				
Short-Circuit Current Rating (AC)	I_{SCCR}	25 kA				
TOV Withstand 5 s	U_T	180 V	335 V	335 V	335 V	580 V
TOV 120 min	U_T	230 V	440 V	440 V	440 V	765 V
	mode	Safe Fail	Safe Fail	Safe Fail	Safe Fail	Safe Fail
Number of Ports		1				
Mechanical & Environmental						
Operating Temperature Range	T_a	-40 ºF to +158 ºF [-40 ºC to +70 ºC]				
Permissible Operating Humidity	RH	5% to 95%				
Atmospheric Pressure and Altitude		80 kPa to 106 kPa / -500 m to 2000 m				
Terminal Screw Torque	M_{max}	39.9 lbf·in [4.5 Nm]				
Conductor Cross Section (max.)		2 AWG (Solid, Stranded) / 4 AWG (Flexible)				
		35 mm² (Solid, Stranded) / 25 mm² (Flexible)				
Mounting		35 mm DIN Rail, EN 60715				
Degree of Protection		IP20 (built-in)				
Housing Material		Thermoplastic: Extinguishing Degree UL 94 V-0				
Thermal Protection		Yes				
Operating State / Fault Indication		Green ok / Red defect				
Remote Contacts (RC)		Optional				
RC Switching Capacity		AC: 250 V / 0.5 A; DC: 250 V / 0.1 A; 125 V / 0.2 A; 75 V / 0.5 A				
RC Conductor Cross Section (max.)		16 AWG (Solid) / 1.5 mm² (Solid)				
Order Information						
Ordering Code		150	275	320	385	440
FLP40-xxx/4		4015041	4027541	4032041	4038541	4044041
FLP40-xxx/4S (with remote contacts)		4015042	4027542	4032042	4038542	4044042
FLP40-xxx/0 (spare modules)		4015001	4027501	4032001	4038501	4044001

Internal Configuration

Legend

- L Line Conductor Terminal
- N Neutral Conductor Terminal
- ⏚ PE/G Conductor Terminal
- S Signalling Contacts Optional

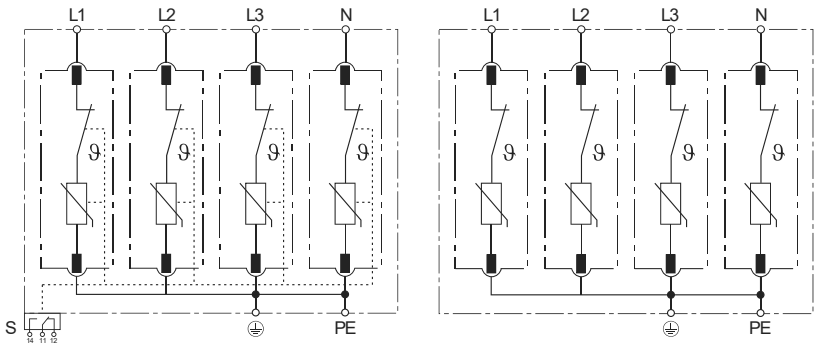

Dimensions & Packaging

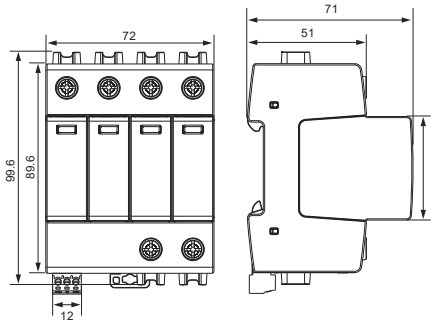

[mm]

Complete Unit					
SLP40-xxx/4(S)	150	275	320	385	440
DIN 43880 Dimension	1 CTN				
Packaging Dimensions (H x W x L)	[260 × 220 × 330 mm]				
Standard Order Quantity	24 Units				

Spare Plug

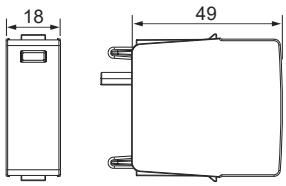

Single Unit					
SLP40-xxx/0	150	275	320	385	440
DIN 43880 Dimension	1 CTN				
Packaging Dimensions (H x W x L)	[260 × 220 × 330 mm]				
Standard Order Quantity	120 Units				

Connection Diagram

TN-S (Three-phase, 4+0)

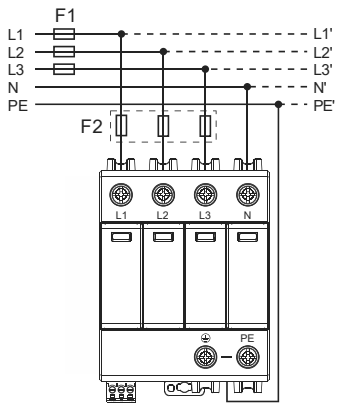

AC Surge Protective Device

SLP40-xxx/1(S)+1

Class II • Type 2

Location of Use:	Sub-Distribution Boards
Network Systems:	TT, TN-S
Mode of Protection:	L-N, N-PE
Surge Ratings:	I_n = 20 kA (8/20 µs)
IEC/EN Category:	Class II / Type 2
Protective Elements:	High Energy MOV and GDT
Housing:	Pluggable Design
Compliance:	IEC 61643-11:2011 EN 61643-11:2012

Technical Data

SLP40-xxx/1(S)+1			75	150	275	320	385	440
IEC Electrical								
Nominal AC Voltage (50/60 Hz)			60 V	120 V	230 V	230 V	230 V	400 V
Maximum Continuous Operating Voltage	(L-N)	U_C	75 V	150 V	275 V	320 V	385 V	440 V
	(N-PE)	U_C	255 V					
Nominal Discharge Current (8/20 µs)	(L-N) / (N-PE)	I_n	20 kA / 20 kA					
Maximum Discharge Current (8/20 µs)	(L-N) / (N-PE)	I_{max}	40 kA / 40 kA					
Voltage Protection Level	(L-N) / (N-PE)	U_p	0.4 kV / 1.5 kV	1.0 kV / 1.5 kV	1.5 kV / 1.5 kV	1.6 kV / 1.5 kV	1.8 kV / 1.5 kV	2.0 kV / 1.5 kV
Follow Current Interrupt Rating	(N-PE)	I_{fi}	100 A_{RMS}					
Residual Current at U_C		I_{PE}	none					
Response Time	(L-N) / (N-PE)	t_A	< 25 ns / < 100 ns					
Max. Backup Fuse			125 A gL / gG					
Short-Circuit Current Rating (AC)	(L-N)	I_{SCCR}	25 kA					
TOV Withstand 5 s	(L-N)	U_T	90 V	180 V	335 V	335 V	335 V	580 V
TOV 120 min	(L-N)	U_T	115 V	230 V	440 V	440 V	440 V	765 V
		mode	Withstand	Withstand	Safe Fail	Safe Fail	Safe Fail	Safe Fail
TOV Withstand 200 ms	(N-PE)	U_T	1200 V					
Number of Ports			1					
Mechanical & Environmental								
Operating Temperature Range		T_a	-40 ºF to +158 ºF [-40 ºC to +70 ºC]					
Permissible Operating Humidity		RH	5% to 95%					
Atmospheric Pressure and Altitude			80 kPa to 106 kPa / -500 m to 2000 m					
Terminal Screw Torque		M_{max}	39.9 lbf·in [4.5 Nm]					
Conductor Cross Section (max.)			2 AWG (Solid, Stranded) / 4 AWG (Flexible)					
			35 mm^2 (Solid, Stranded) / 25 mm^2 (Flexible)					
Mounting			35 mm DIN Rail, EN 60715					
Degree of Protection			IP20 (built-in)					
Housing Material			Thermoplastic: Extinguishing Degree UL 94 V-0					
Thermal Protection			Yes					
Operating State / Fault Indication			Green ok / Red defect					
Remote Contacts (RC)			Optional					
RC Switching Capacity			AC: 250 V / 0.5 A; DC: 250 V / 0.1 A; 125 V / 0.2 A; 75 V / 0.5 A					
RC Conductor Cross Section (max.)			16 AWG (Solid) / 1.5 mm^2 (Solid)					
Order Information								
Ordering Code			75	150	275	320	385	440
FLP40-xxx/1+1			4007513	4015013	4027513	4032013	4038513	4044013
FLP40-xxx/1S+1 (with remote contacts)			4007514	4015014	4027514	4032014	4038514	4044014
FLP40-xxx/0 (spare modules)			4007501	4015001	4027501	4032001	4038501	4044001
FLP40-255/0 (spare modules)			4025502	4025501	4025501	4025501	4025501	4025501

SLP40-xxx/1(S)+1

Internal Configuration

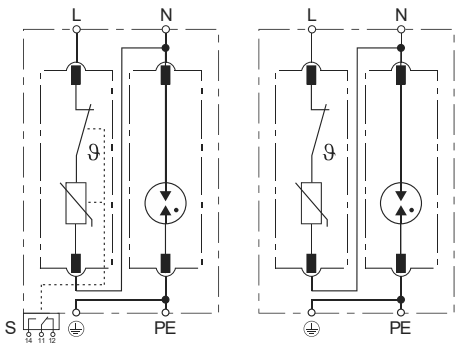

Legend

- L Line Conductor Terminal
- N Neutral Conductor Terminal
- ⏚ PE/G Conductor Terminal
- S Signalling Contacts Optional

Dimensions & Packaging

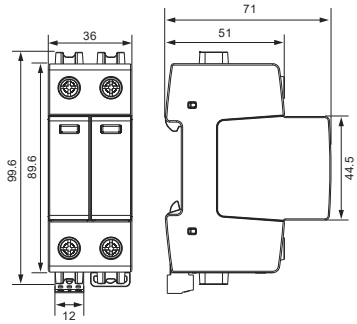

[mm]

Complete Unit						
SLP40-xxx/1(S)+1	75	150	275	320	385	440
DIN 43880 Dimension	1 CTN					
Packaging Dimensions (H x W x L)	[260 × 220 × 330 mm]					
Standard Order Quantity	48 Units					

Spare Plug

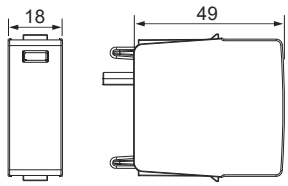

Single Unit						
SLP40-xxx/0	75	150	275	320	385	440
SLP40-255/0	255					
DIN 43880 Dimension	1 CTN					
Packaging Dimensions (H x W x L)	[260 × 220 × 330 mm]					
Standard Order Quantity	120 Units					

Connection Diagram

TN-S, TT (Single-phase, 1+1)

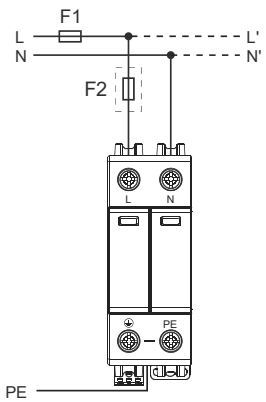

AC Surge Protective Device
SLP40-xxx/3(S)+1
Class II • Type 2

Location of Use: Sub-Distribution Boards
Network Systems: TT, TN-S,
Mode of Protection: L-N, N-PE
Surge Ratings: I_n = 20 kA (8/20 µs)
IEC/EN Category: Class II / Type 2
Protective Elements: High Energy MOV and GDT
Housing: Pluggable Design
Compliance: IEC 61643-11:2011
EN 61643-11:2012

Technical Data

SLP40-xxx/3(S)+1			150	275	320	385	440
IEC Electrical							
Nominal AC Voltage (50/60 Hz)			120 V	230 V	230 V	230 V	400 V
Maximum Continuous Operating Voltage	(L-N)	U_C	150 V	275 V	320 V	385 V	440 V
	(N-PE)	U_C			255 V		
Nominal Discharge Current (8/20 µs)	(L-N) / (N-PE)	I_n			20 kA / 20 kA		
Maximum Discharge Current (8/20 µs)	(L-N) / (N-PE)	I_{max}			40 kA / 40 kA		
Voltage Protection Level	(L-N) / (N-PE)	U_p	1.0 kV / 1.5 kV	1.5 kV / 1.5 kV	1.6 kV / 1.5 kV	1.8 kV / 1.5 kV	2.0 kV / 1.5 kV
Follow Current Interrupt Rating	(N-PE)	I_{fi}			100 A_{RMS}		
Residual Current at U_C		I_{PE}			none		
Response Time	(L-N) / (N-PE)	t_A			< 25 ns / < 100 ns		
Max. Backup Fuse					125 A gL / gG		
Short-Circuit Current Rating (AC)	(L-N)	I_{SCCR}			25 kA		
TOV Withstand 5 s	(L-N)	U_T	180 V	335 V	335 V	335 V	580 V
TOV 120 min	(L-N)	U_T	230 V	440 V	440 V	440 V	765 V
		mode	Safe Fail	Safe Fail	Safe Fail	Safe Fail	Safe Fail
TOV Withstand 200 ms	(N-PE)	U_T			1200 V		
Number of Ports					1		
Mechanical & Environmental							
Operating Temperature Range		T_a			-40 ºF to +158 ºF [-40 ºC to +70 ºC]		
Permissible Operating Humidity		RH			5% to 95%		
Atmospheric Pressure and Altitude					80 kPa to 106 kPa / -500 m to 2000 m		
Terminal Screw Torque		M_{max}			39.9 lbf·in [4.5 Nm]		
Conductor Cross Section (max.)					2 AWG (Solid, Stranded) / 4 AWG (Flexible)		
					35 mm^2 (Solid, Stranded) / 25 mm^2 (Flexible)		
Mounting					35 mm DIN Rail, EN 60715		
Degree of Protection					IP20 (built-in)		
Housing Material					Thermoplastic: Extinguishing Degree UL 94 V-0		
Thermal Protection					Yes		
Operating State / Fault Indication					Green ok / Red defect		
Remote Contacts (RC)					Optional		
RC Switching Capacity					AC: 250 V / 0.5 A; DC: 250 V / 0.1 A; 125 V / 0.2 A; 75 V / 0.5 A		
RC Conductor Cross Section (max.)					16 AWG (Solid) / 1.5 mm^2 (Solid)		
Order Information							
Ordering Code			150	275	320	385	440
FLP40-xxx/3+1			4015033	4027533	4032033	4038533	4044033
FLP40-xxx/3S+1 (with remote contacts)			4015034	4027534	4032034	4038534	4044034
FLP40-xxx/0 (spare modules)			4015001	4027501	4032001	4038501	4044001
FLP40-255/0 (spare modules)			4025501	4025501	4025501	4025501	4025501

SLP40-xxx/3(S)+1

Internal Configuration

Legend

- L Line Conductor Terminal
- N Neutral Conductor Terminal
- ⏚ PE/G Conductor Terminal
- S Signalling Contacts Optional

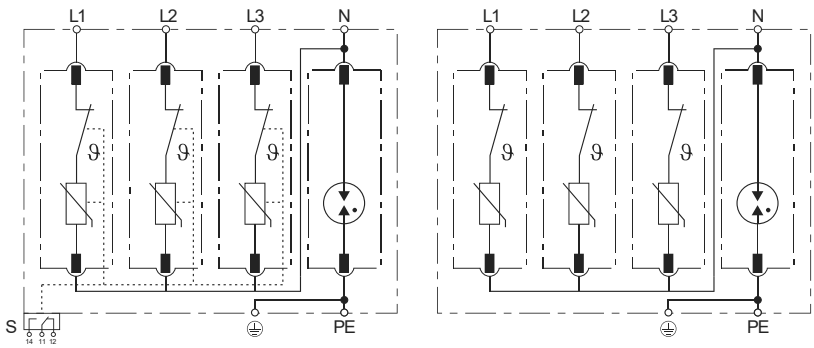

Dimensions & Packaging

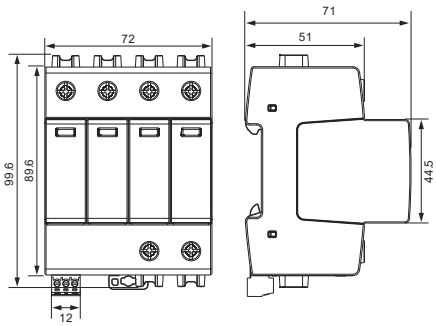

[mm]

Complete Unit					
SLP40-xxx/3(S)+1	150	275	320	385	440
DIN 43880 Dimension	1 CTN				
Packaging Dimensions (H x W x L)	[260 × 220 × 330 mm]				
Standard Order Quantity	24 Units				

Spare Plug

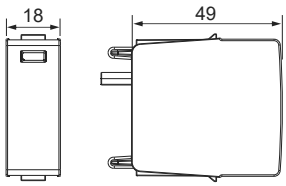

Single Unit					
SLP40-xxx/0	150	275	320	385	440
SLP40-255/0	255				
DIN 43880 Dimension	1 CTN				
Packaging Dimensions (H x W x L)	[260 × 220 × 330 mm]				
Standard Order Quantity	120 Units				

Connection Diagram

TN-S, TT (Three-phase, 3+1)

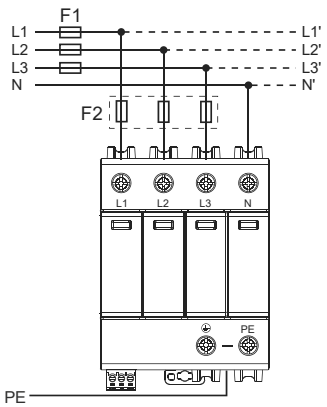

Compact AC Surge Protective Device

SLP40K-xxx/2(S)

Class II • Type 2

Location of Use:	Sub-Distribution Boards
Network Systems:	TN-S
Mode of Protection:	L-PE, N-PE
Surge Ratings:	I_n = 20 kA (8/20 µs)
IEC/EN/UL Category:	Class II / Type 2
Protective Elements:	High Energy MOV
Housing:	Pluggable Design
Compliance:	IEC 61643-11:2011 EN 61643-11:2012

Technical Data

SLP40K-xxx/2(S)		75	150	275	320	385	440
IEC Electrical							
Nominal AC Voltage (50/60 Hz)	U_o / U_n	60 V	120 V	230 V	230 V	230 V	400 V
Maximum Continuous Operating Voltage (AC)	U_C	75 V	150 V	275 V	320 V	385 V	440 V
Nominal Discharge Current (8/20 µs)	I_n	20 kA					
Maximum Discharge Current (8/20 µs)	I_{max}	40 kA					
Voltage Protection Level	U_p	400 V	1000 V	1500 V	1600 V	1800 V	2000 V
Response Time	t_A	< 25 ns					
Max. Backup Fuse		125 A gL / gG					
Short-Circuit Current Rating (AC)	I_{SCCR}	25 kA					
TOV Withstand 5 s	U_T	90 V	180 V	335 V	335 V	335 V	580 V
TOV 120 min	U_T	115 V	230 V	440 V	440 V	440 V	765 V
	mode	Withstand	Withstand	Safe Fail	Safe Fail	Safe Fail	Safe Fail
Number of Ports		1					
Mechanical & Environmental							
Operating Temperature Range	T_a	-40 ºF to +158 ºF [-40 ºC to +70 ºC]					
Permissible Operating Humidity	RH	5% to 95%					
Atmospheric Pressure and Altitude		80 kPa to 106 kPa / -500 m to 2000 m					
Terminal Screw Torque	(L, N) M_{max}	13.3 lbf·in [1.5 Nm]					
	(PE) M_{max}	39.9 lbf·in [4.5 Nm]					
Conductor Cross Section (max.)	(L, N)	5 AWG (Solid, Stranded) / 7 AWG (Flexible)					
		16 mm² (Solid, Stranded) / 10 mm² (Flexible)					
Conductor Cross Section (max.)	(PE)	2 AWG (Solid, Stranded) / 4 AWG (Flexible)					
		35 mm² (Solid, Stranded) / 25 mm² (Flexible)					
Mounting		35 mm DIN Rail, EN 60715					
Degree of Protection		IP20 (built-in)					
Housing Material		Thermoplastic: Extinguishing Degree UL 94 V-0					
Thermal Protection		Yes					
Operating State / Fault Indication		Green ok / Red defect					
Remote Contacts (RC)		Optional					
RC Switching Capacity		AC: 250 V / 0.5 A; DC: 250 V / 0.1 A; 125 V / 0.2 A; 75 V / 0.5 A					
RC Conductor Cross Section (max.)		16 AWG (Solid) / 1.5 mm² (Solid)					
RC Terminal Screw Torque		2.2 lbf·in [0.25 Nm]					
Order Information							
Ordering Code		75	150	275	320	385	440
SLP40K-xxx/2		K4007521	K4015021	K4027521	K4032021	K4038521	K4044021
SLP40K-xxx/2S (with remote contacts)		K4007522	K4015022	K4027522	K4032022	K4038522	K4044022
SLP40K-xxx/0 (spare modules)		K4007501	K4015001	K4027501	K4032001	K4038501	K4044001

SLP40K-xxx/2(S)

Internal Configuration

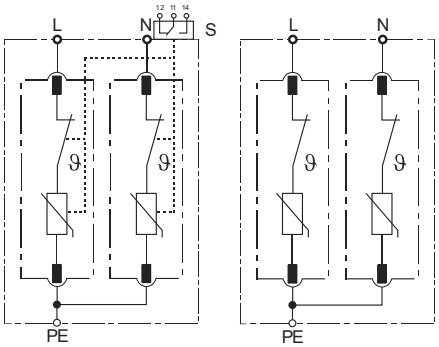

Legend

- L Line Conductor Terminal
- N Neutral Conductor Terminal
- ⏚ PE/G Conductor Terminal
- S Signalling Contacts Optional

Dimensions & Packaging

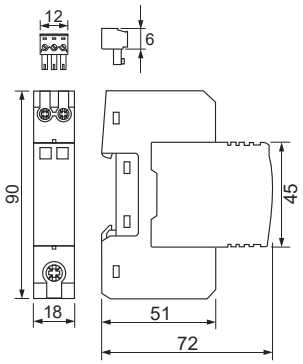

[mm]

Complete Unit						
SLP40K-xxx/2(S)	75	150	275	320	385	440
DIN 43880 Dimension	1 CTN					
Packaging Dimensions (H x W x L)	[260 × 220 × 330 mm]					
Standard Order Quantity	96 Units					

Spare Plug

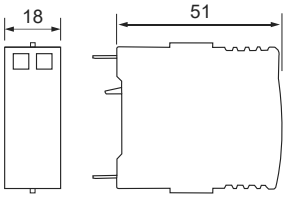

Single Unit						
SLP40K-xxx/0	75	150	275	320	385	440
DIN 43880 Dimension	1 CTN					
Packaging Dimensions (H x W x L)	[260 × 220 × 330 mm]					
Standard Order Quantity	120 Units					

Connection Diagram

TN-S (Single-phase, 2+0)

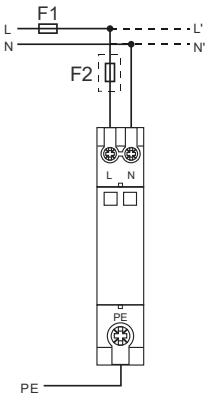

Compact AC Surge Protective Device

SLP40K-xxx/4(S)

Class II • Type 2

Location of Use:	Sub-Distribution Boards
Network Systems:	TN-S
Mode of Protection:	L-PE, N-PE
Surge Ratings:	I_n = 20 kA (8/20 µs)
IEC/EN/UL Category:	Class II / Type 2
Protective Elements:	High Energy MOV
Housing:	Pluggable Design
Compliance:	IEC 61643-11:2011 EN 61643-11:2012

Technical Data

SLP40K-xxx/4(S)		150	275	320	385	440
IEC Electrical						
Nominal AC Voltage (50/60 Hz)	U_o / U_n	120 V	230 V	230 V	230 V	400 V
Maximum Continuous Operating Voltage (AC)	U_C	150 V	275 V	320 V	385 V	440 V
Nominal Discharge Current (8/20 µs)	I_n			20 kA		
Maximum Discharge Current (8/20 µs)	I_{max}			40 kA		
Voltage Protection Level	U_p	1000 V	1500 V	1600 V	1800 V	2000 V
Response Time	t_A			< 25 ns		
Max. Backup Fuse				125 A gL / gG		
Short-Circuit Current Rating (AC)	I_{SCCR}			25 kA		
TOV Withstand 5 s	U_T	180 V	335 V	335 V	335 V	580 V
TOV 120 min	U_T	230 V	440 V	440 V	440 V	765 V
	mode	Withstand	Safe Fail	Safe Fail	Safe Fail	Safe Fail
Number of Ports				1		
Mechanical & Environmental						
Operating Temperature Range	T_a	-40 ºF to +158 ºF [-40 ºC to +70 ºC]				
Permissible Operating Humidity	RH	5% to 95%				
Atmospheric Pressure and Altitude		80 kPa to 106 kPa / -500 m to 2000 m				
Terminal Screw Torque	(L, N) M_{max}	13.3 lbf·in [1.5 Nm]				
	(PE) M_{max}	39.9 lbf·in [4.5 Nm]				
Conductor Cross Section (max.)	(L, N)	5 AWG (Solid, Stranded) / 7 AWG (Flexible)				
		16 mm² (Solid, Stranded) / 10 mm² (Flexible)				
Conductor Cross Section (max.)	(PE)	2 AWG (Solid, Stranded) / 4 AWG (Flexible)				
		35 mm² (Solid, Stranded) / 25 mm² (Flexible)				
Mounting		35 mm DIN Rail, EN 60715				
Degree of Protection		IP20 (built-in)				
Housing Material		Thermoplastic: Extinguishing Degree UL 94 V-0				
Thermal Protection		Yes				
Operating State / Fault Indication		Green ok / Red defect				
Remote Contacts (RC)		Optional				
RC Switching Capacity		AC: 250 V / 0.5 A; DC: 250 V / 0.1 A; 125 V / 0.2 A; 75 V / 0.5 A				
RC Conductor Cross Section (max.)		16 AWG (Solid) / 1.5 mm² (Solid)				
RC Terminal Screw Torque		2.2 lbf·in [0.25 Nm]				
Order Information						
Ordering Code		150	275	320	385	440
SLP40K-xxx/4		K4015041	K4027541	K4032041	K4038541	K4044041
SLP40K-xxx/4S (with remote contacts)		K4015042	K4027542	K4032042	K4038542	K4044042
SLP40K-xxx/0 (spare modules)		K4015001	K4027501	K4032001	K4038501	K4044001

SLP40k-xxx/4(S)

Internal Configuration

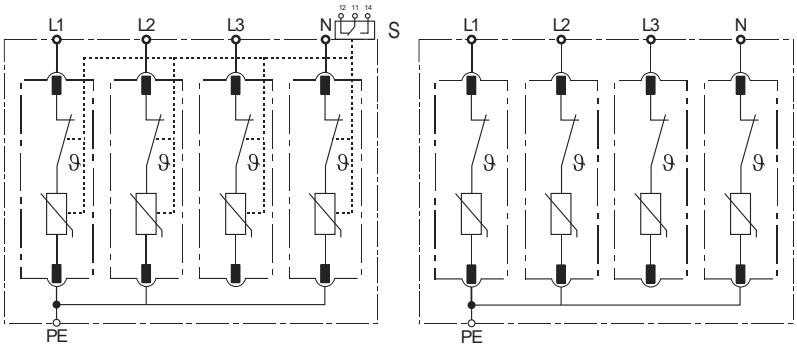

Legend

- L Line Conductor Terminal
- N Neutral Conductor Terminal
- ⏚ PE/G Conductor Terminal
- S Signalling Contacts Optional

Dimensions & Packaging

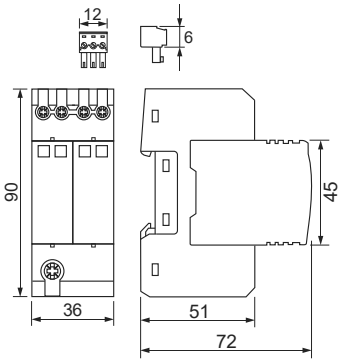

[mm]

Complete Unit					
SLP40K-xxx/4(S)	150	275	320	385	440
DIN 43880 Dimension	1 CTN				
Packaging Dimensions (H x W x L)	[260 × 220 × 330 mm]				
Standard Order Quantity	48 Units				

Spare Plug

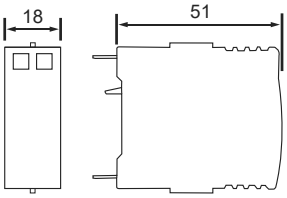

Single Unit					
SLP40K-xxx/0	150	275	320	385	440
DIN 43880 Dimension	1 CTN				
Packaging Dimensions (H x W x L)	[260 × 220 × 330 mm]				
Standard Order Quantity	120 Units				

Connection Diagram

TN-S (Three-phase, 4+0)

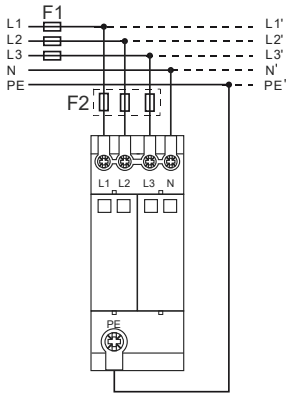

Compact AC Surge Protective Device

SLP40K-xxx/1(S)+1

Class II • Type 2

Location of Use:	Sub-Distribution Boards
Network Systems:	TT, TN-S
Mode of Protection:	L-N, N-PE
Surge Ratings:	I_n = 20 kA (8/20 µs)
IEC/EN Category:	Class II / Type 2
Protective Elements:	High Energy MOV and GDT
Housing:	Pluggable Design
Compliance:	IEC 61643-11:2011 EN 61643-11:2012

Technical Data

SLP40K-xxx/1(S)+1			75	150	275	320	385	440
IEC Electrical								
Nominal AC Voltage (50/60 Hz)			60 V	120 V	230 V	230 V	230 V	400 V
Maximum Continuous Operating Voltage	(L-N)	U_C	75 V	150 V	275 V	320 V	385 V	440 V
	(N-PE)	U_C	255 V					
Nominal Discharge Current (8/20 µs)	(L-N) / (N-PE)	I_n	20 kA / 20 kA					
Maximum Discharge Current (8/20 µs)	(L-N) / (N-PE)	I_{max}	40 kA / 40 kA					
Voltage Protection Level	(L-N) / (N-PE)	U_p	0.4 kV / 1.5 kV	1.0 kV / 1.5 kV	1.5 kV / 1.5 kV	1.6 kV / 1.5 kV	1.8 kV / 1.5 kV	2.0 kV / 1.5 kV
Follow Current Interrupt Rating	(N-PE)	I_{fi}	100 A_{RMS}					
Response Time	(L-N) / (N-PE)	t_A	< 25 ns / < 100 ns					
Max. Backup Fuse			125 A gL / gG					
Short-Circuit Current Rating (AC)	(L-N)	I_{SCCR}	25 kA					
TOV Withstand 5 s	(L-N)	U_T	90 V	180 V	335 V	335 V	335 V	580 V
TOV 120 min	(L-N)	U_T	115 V	230 V	440 V	440 V	440 V	765 V
		mode	Withstand	Withstand	Safe Fail	Safe Fail	Safe Fail	Safe Fail
TOV Withstand 200 ms	(N-PE)	U_T	1200 V					
Number of Ports			1					
Mechanical & Environmental								
Operating Temperature Range		T_a	-40 ºF to +158 ºF [-40 ºC to +70 ºC]					
Permissible Operating Humidity		RH	5% to 95%					
Atmospheric Pressure and Altitude			80 kPa to 106 kPa / -500 m to 2000 m					
Terminal Screw Torque	(L, N)	M_{max}	13.3 lbf·in [1.5 Nm]					
	(PE)	M_{max}	39.9 lbf·in [4.5 Nm]					
Conductor Cross Section (max.)	(L, N)		5 AWG (Solid, Stranded) / 7 AWG (Flexible)					
			16 mm² (Solid, Stranded) / 10 mm² (Flexible)					
Conductor Cross Section (max.)	(PE)		2 AWG (Solid, Stranded) / 4 AWG (Flexible)					
			35 mm² (Solid, Stranded) / 25 mm² (Flexible)					
Mounting			35 mm DIN Rail, EN 60715					
Degree of Protection			IP20 (built-in)					
Housing Material			Thermoplastic: Extinguishing Degree UL 94 V-0					
Thermal Protection			Yes					
Operating State / Fault Indication			Green ok / Red defect					
Remote Contacts (RC)			Optional					
RC Switching Capacity			AC: 250 V / 0.5 A; DC: 250 V / 0.1 A; 125 V / 0.2 A; 75 V / 0.5 A					
RC Conductor Cross Section (max.)			16 AWG (Solid) / 1.5 mm² (Solid)					
RC Terminal Screw Torque			2.2 lbf·in [0.25 Nm]					
Order Information								
Ordering Code			75	150	275	320	385	440
SLP40K-xxx/1+1			K4007513	K4015013	K4027513	K4032013	K4038513	K4044013
SLP40K-xxx/1S+1 (with remote contacts)			K4007514	K4015014	K4027514	K4032014	K4038514	K4044014
SLP40K-xxx/255/0 (spare modules)			K4007502	K4015002	K4027502	K4032002	K4038502	K4044501

Internal Configuration

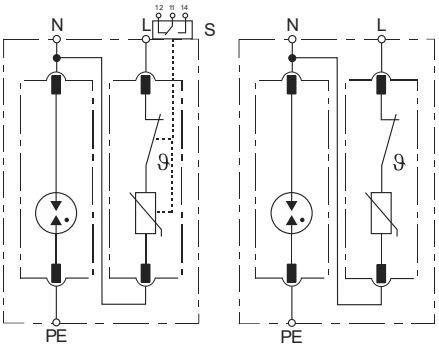

Legend

- L Line Conductor Terminal
- N Neutral Conductor Terminal
- ⏚ PE/G Conductor Terminal
- S Signalling Contacts Optional

Dimensions & Packaging

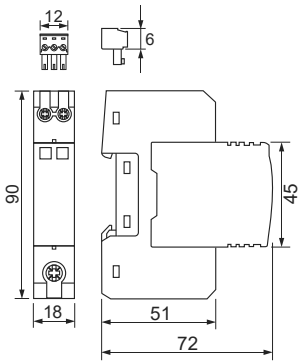

[mm]

Complete Unit						
SLP40K-xxx/1(S)+1	75	150	275	320	385	440
DIN 43880 Dimension	1 CTN					
Packaging Dimensions (H x W x L)	[260 × 220 × 330 mm]					
Standard Order Quantity	96 Units					

Spare Plug

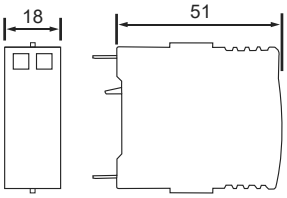

Single Unit						
40K-xxx/255/0	75	150	275	320	385	440
DIN 43880 Dimension	1 CTN					
Packaging Dimensions (H x W x L)	[260 × 220 × 330 mm]					
Standard Order Quantity	120 Units					

Connection Diagram

TN-S, TT (Single-phase, 1+1)

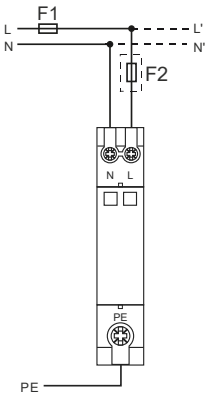

Compact AC Surge Protective Device

SLP40K-xxx/3(S)+1

Class II • Type 2

Location of Use: Sub-Distribution Boards
Network Systems: TT, TN-S
Mode of Protection: L-N, N-PE
Surge Ratings: I_n = 20 kA (8/20 µs)
IEC/EN Category: Class II / Type 2
Protective Elements: High Energy MOV and GDT
Housing: Pluggable Design
Compliance: IEC 61643-11:2011
EN 61643-11:2012

Technical Data

SLP40K-xxx/3(S)+1			150	275	320	385	440
IEC Electrical							
Nominal AC Voltage (50/60 Hz)			120 V	230 V	230 V	230 V	400 V
Maximum Continuous Operating Voltage	(L-N)	U_C	150 V	275 V	320 V	385 V	440 V
	(N-PE)	U_C			255 V		
Nominal Discharge Current (8/20 µs)	(L-N) / (N-PE)	I_n			20 kA / 20 kA		
Maximum Discharge Current (8/20 µs)	(L-N) / (N-PE)	I_{max}			40 kA / 40 kA		
Voltage Protection Level	(L-N) / (N-PE)	U_p	1.0 kV / 1.5 kV	1.5 kV / 1.5 kV	1.6 kV / 1.5 kV	1.8 kV / 1.5 kV	2.0 kV / 1.5 kV
Follow Current Interrupt Rating	(N-PE)	I_{fi}			100 A_{RMS}		
Response Time	(L-N) / (N-PE)	t_A			< 25 ns / < 100 ns		
Max. Backup Fuse					125 A gL / gG		
Short-Circuit Current Rating (AC)	(L-N)	I_{SCCR}			25 kA		
TOV Withstand 5 s	(L-N)	U_T	180 V	335 V	335 V	335 V	580 V
TOV 120 min	(L-N)	U_T	230 V	440 V	440 V	440 V	765 V
		mode	Withstand	Safe Fail	Safe Fail	Safe Fail	Safe Fail
TOV Withstand 200 ms	(N-PE)	U_T			1200 V		
Number of Ports					1		
Mechanical & Environmental							
Operating Temperature Range		T_a			-40 ºF to +158 ºF [-40 ºC to +70 ºC]		
Permissible Operating Humidity		RH			5% to 95%		
Atmospheric Pressure and Altitude					80 kPa to 106 kPa / -500 m to 2000 m		
Terminal Screw Torque	(L, N)	M_{max}			13.3 lbf·in [1.5 Nm]		
	(PE)	M_{max}			39.9 lbf·in [4.5 Nm]		
Conductor Cross Section (max.)	(L, N)				5 AWG (Solid, Stranded) / 7 AWG (Flexible)		
					16 mm² (Solid, Stranded) / 10 mm² (Flexible)		
Conductor Cross Section (max.)	(PE)				2 AWG (Solid, Stranded) / 4 AWG (Flexible)		
					35 mm² (Solid, Stranded) / 25 mm² (Flexible)		
Mounting					35 mm DIN Rail, EN 60715		
Degree of Protection					IP20 (built-in)		
Housing Material					Thermoplastic: Extinguishing Degree UL 94 V-0		
Thermal Protection					Yes		
Operating State / Fault Indication					Green ok / Red defect		
Remote Contacts (RC)					Optional		
RC Switching Capacity					AC: 250 V / 0.5 A; DC: 250 V / 0.1 A; 125 V / 0.2 A; 75 V / 0.5 A		
RC Conductor Cross Section (max.)					16 AWG (Solid) / 1.5 mm² (Solid)		
RC Terminal Screw Torque					2.2 lbf·in [0.25 Nm]		
Order Information							
Ordering Code			150	275	320	385	440
SLP40K-xxx/3+1			K4015033	K4027533	K4032033	K4038533	K4044033
SLP40K-xxx/3S+1 (with remote contacts)			K4015034	K4027534	K4032034	K4038534	K4044034
SLP40K-xxx/0 (spare modules)			K4015001	K4027501	K4032001	K4038501	K4044001
SLP40K-xxx/255/0 (spare modules)			K4015502	K4027502	K4032002	K4038502	K4044002

Internal Configuration

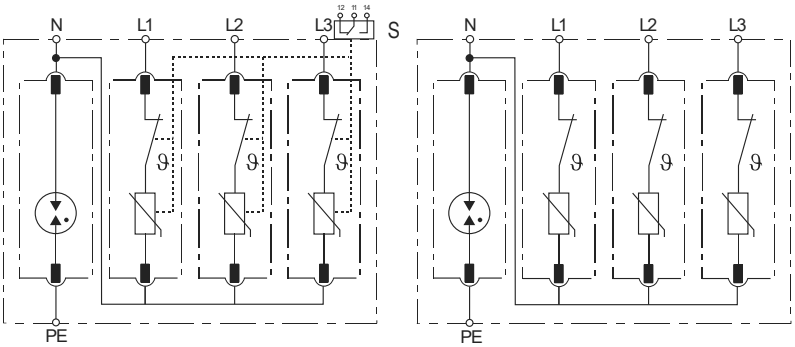

Legend

- L Line Conductor Terminal
- N Neutral Conductor Terminal
- ⏚ PE/G Conductor Terminal
- S Signalling Contacts Optional

Dimensions & Packaging

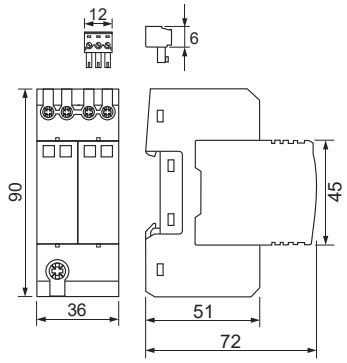

[mm]

Complete Unit					
SLP40K-xxx/3(S)+1	150	275	320	385	440
DIN 43880 Dimension	1 CTN				
Packaging Dimensions (H x W x L)	[260 × 220 × 330 mm]				
Standard Order Quantity	48 Units				

Spare Plug

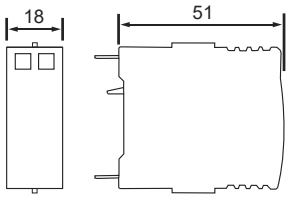

Single Unit					
SLP40K-xxx/0	150	275	320	385	440
SLP40K-xxx/255/0	150	275	320	385	440
DIN 43880 Dimension	1 CTN				
Packaging Dimensions (H x W x L)	[260 × 220 × 330 mm]				
Standard Order Quantity	120 Units				

Connection Diagram

TN-S, TT (Three-phase, 3+1)

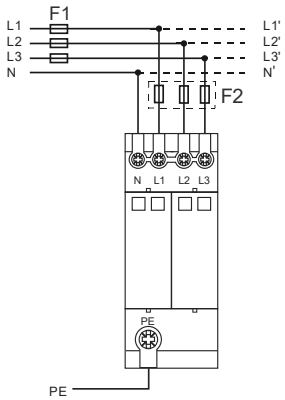

AC Surge Protective Device

SLP20-xxx/1(S)

Class II • Class III • Type 2 • Type 3

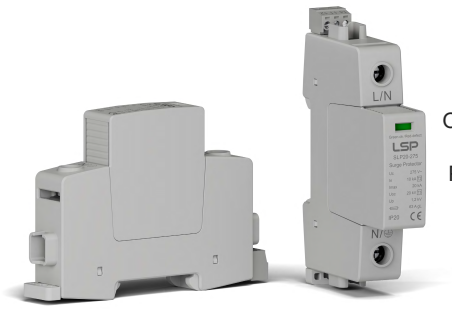

Location of Use:	Sub-Distribution Boards
Network Systems:	TN-S, TN-C, TT (only L-N)
Mode of Protection:	L-PE, N-PE (only TN-S), L-PEN, L-N
Surge Ratings:	I_n = 20 kA (8/20 µs)
Open Circuit Voltage:	U_{oc}= 20 kV (1.2/50 µs)
IEC/EN Category:	Class II+III / Type 2+3
Protective Elements:	High Energy MOV
Housing:	Pluggable Design
Compliance:	IEC 61643-11:2011 EN 61643-11:2012

Technical Data

SLP20-xxx/1(S)		75	150	275	320	385	440
IEC Electrical							
Nominal AC Voltage (50/60 Hz)	U_o / U_n	60 V	120 V	230 V	230 V	230 V	400 V
Maximum Continuous Operating Voltage (AC)	U_C	75 V	150 V	275 V	320 V	385 V	440 V
Nominal Discharge Current (8/20 µs)	I_n	10 kA	10 kA	10 kA	10 kA	10 kA	10 kA
Maximum Discharge Current (8/20 µs)	I_{max}	20 kA	20 kA	20 kA	20 kA	20 kA	20 kA
Open Circuit Voltage (1.2/50 µs)	U_{oc}	20 kV					
Voltage Protection Level	U_p	400 V	1000 V	1500 V	1600 V	1800 V	2000 V
Residual Current at U_c	I_{PE}	< 0.5 mA					
Response Time	t_A	< 25 ns					
Max. Backup Fuse		63 A gL / gG					
Short-Circuit Current Rating (AC)	I_{SCCR}	10 kA					
TOV Withstand 5 s	U_T	90 V	180 V	335 V	335 V	335 V	580 V
TOV 120 min	U_T	115 V	230 V	440 V	440 V	440 V	765 V
	mode	Withstand	Withstand	Safe Fail	Safe Fail	Safe Fail	Safe Fail
Number of Ports		1					
Mechanical & Environmental							
Operating Temperature Range	T_a	-40 ºF to +158 ºF [-40 ºC to +70 ºC]					
Permissible Operating Humidity	RH	5% to 95%					
Atmospheric Pressure and Altitude		80 kPa to 106 kPa / -500 m to 2000 m					
Terminal Screw Torque	M_{max}	39.9 lbf·in [4.5 Nm]					
Conductor Cross Section (max.)		2 AWG (Solid, Stranded) / 4 AWG (Flexible)					
		35 mm² (Solid, Stranded) / 25 mm² (Flexible)					
Mounting		35 mm DIN Rail, EN 60715					
Degree of Protection		IP20 (built-in)					
Housing Material		Thermoplastic: Extinguishing Degree UL 94 V-0					
Thermal Protection		Yes					
Operating State / Fault Indication		Green ok / Red defect					
Remote Contacts (RC)		Optional					
RC Switching Capacity		AC: 250 V / 0.5 A; DC: 250 V / 0.1 A; 125 V / 0.2 A; 75 V / 0.5 A					
RC Conductor Cross Section (max.)		16 AWG (Solid) / 1.5 mm² (Solid)					
Order Information							
Ordering Code		75	150	275	320	385	440
SLP20-xxx/1		2007511	2015011	2027511	2032011	2038511	2044011
SLP20-xxx/1S (with remote contacts)		2007512	2015012	2027512	2032012	2038512	2044012
SLP20-xxx/0 (spare modules)		2007501	2015001	2027501	2032001	2038501	2044001

Internal Configuration

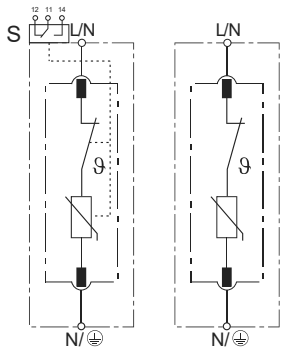

Legend

- L Line Conductor Terminal
- N Neutral Conductor Terminal
- ⏚ PE/G Conductor Terminal
- S Signalling Contacts Optional

Dimensions & Packaging

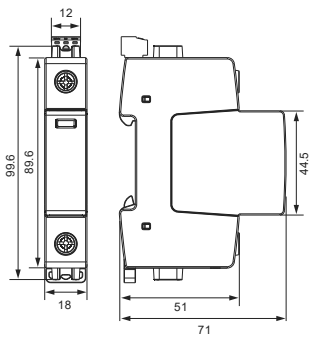

[mm]

Complete Unit						
SLP20-xxx/1(S)	75	150	275	320	385	440
DIN 43880 Dimension	1 CTN					
Packaging Dimensions (H x W x L)	[260 × 220 × 330 mm]					
Standard Order Quantity	96 Units					

Spare Plug

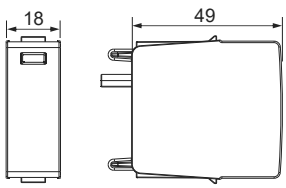

Single Unit						
SLP20-xxx/0	75	150	275	320	385	440
DIN 43880 Dimension	1 CTN					
Packaging Dimensions (H x W x L)	[260 × 220 × 330 mm]					
Standard Order Quantity	120 Units					

Connection Diagram

TN-S, TN-C, TT (Single-phase, 1+0)

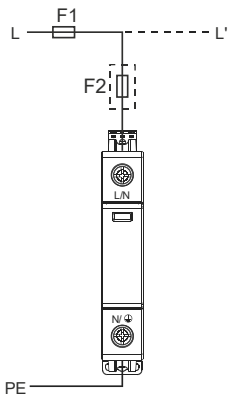

AC Surge Protective Device

SLP20-xxx/2(S)

Class II • Class III • Type 2 • Type 3

Location of Use:	Sub-Distribution Boards
Network Systems:	TN-S
Mode of Protection:	L-PE, N-PE
Surge Ratings:	I_n = 20 kA (8/20 µs)
Open Circuit Voltage:	U_{oc} = 20 kV (1.2/50 µs)
IEC/EN Category:	Class II+III / Type 2+3
Protective Elements:	High Energy MOV
Housing:	Pluggable Design
Compliance:	IEC 61643-11:2011 EN 61643-11:2012

Technical Data

SLP20-xxx/1(S)		75	150	275	320	385	440
IEC Electrical							
Nominal AC Voltage (50/60 Hz)	U_o / U_n	60 V	120 V	230 V	230 V	230 V	400 V
Maximum Continuous Operating Voltage (AC)	U_C	75 V	150 V	275 V	320 V	385 V	440 V
Nominal Discharge Current (8/20 µs)	I_n	10 kA	10 kA	10 kA	10 kA	10 kA	10 kA
Maximum Discharge Current (8/20 µs)	I_{max}	20 kA	20 kA	20 kA	20 kA	20 kA	20 kA
Open Circuit Voltage (1.2/50 µs)	U_{oc}	20 kV					
Voltage Protection Level	U_p	300 V	600 V	1200 V	1400 V	1600 V	1800 V
Residual Current at U_c	I_{PE}	< 0.5 mA					
Response Time	t_A	< 25 ns					
Max. Backup Fuse		63 A gL / gG					
Short-Circuit Current Rating (AC)	I_{SCCR}	10 kA					
TOV Withstand 5 s	U_T	90 V	180 V	335 V	335 V	335 V	580 V
TOV 120 min	U_T	115 V	230 V	440 V	440 V	440 V	765 V
	mode	Withstand	Withstand	Safe Fail	Safe Fail	Safe Fail	Safe Fail
Number of Ports		1					
Mechanical & Environmental							
Operating Temperature Range	T_a	-40 ºF to +158 ºF [-40 ºC to +70 ºC]					
Permissible Operating Humidity	RH	5% to 95%					
Atmospheric Pressure and Altitude		80 kPa to 106 kPa / -500 m to 2000 m					
Terminal Screw Torque	M_{max}	39.9 lbf·in [4.5 Nm]					
Conductor Cross Section (max.)		2 AWG (Solid, Stranded) / 4 AWG (Flexible)					
		35 mm² (Solid, Stranded) / 25 mm² (Flexible)					
Mounting		35 mm DIN Rail, EN 60715					
Degree of Protection		IP20 (built-in)					
Housing Material		Thermoplastic: Extinguishing Degree UL 94 V-0					
Thermal Protection		Yes					
Operating State / Fault Indication		Green ok / Red defect					
Remote Contacts (RC)		Optional					
RC Switching Capacity		AC: 250 V / 0.5 A; DC: 250 V / 0.1 A; 125 V / 0.2 A; 75 V / 0.5 A					
RC Conductor Cross Section (max.)		16 AWG (Solid) / 1.5 mm² (Solid)					
Order Information							
Ordering Code		75	150	275	320	385	440
SLP20-xxx/2		2007521	2015021	2027521	2032021	2038521	2044021
SLP20-xxx/2S (with remote contacts)		2007522	2015022	2027522	2032022	2038522	2044022
SLP20-xxx/0 (spare modules)		2007501	2015001	2027501	2032001	2038501	2044001

Internal Configuration

Legend

- L Line Conductor Terminal
- N Neutral Conductor Terminal
- ⏚ PE/G Conductor Terminal
- S Signalling Contacts Optional

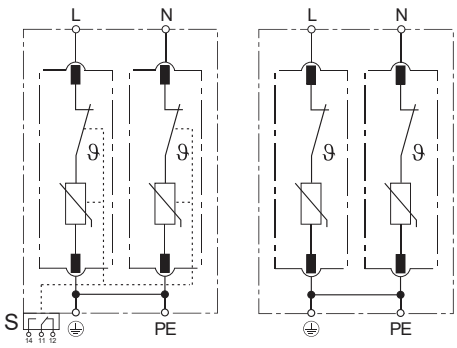

Dimensions & Packaging

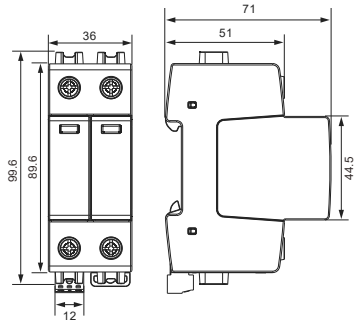

[mm]

Complete Unit						
SLP20-xxx/2(S)	75	150	275	320	385	440
DIN 43880 Dimension	1 CTN					
Packaging Dimensions (H x W x L)	[260 × 220 × 330 mm]					
Standard Order Quantity	48 Units					

Spare Plug

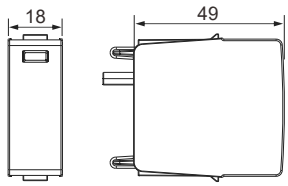

Single Unit						
SLP20-xxx/0	75	150	275	320	385	440
DIN 43880 Dimension	1 CTN					
Packaging Dimensions (H x W x L)	[260 × 220 × 330 mm]					
Standard Order Quantity	120 Units					

Connection Diagram

TN-S (Single-phase, 2+0)

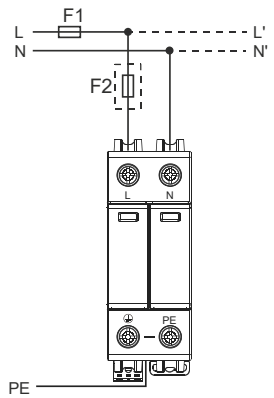

AC Surge Protective Device

SLP20-xxx/3(S)

Class II • Class III • Type 2 • Type 3

Location of Use:	Sub-Distribution Boards
Network Systems:	TN-C
Mode of Protection:	L-PEN
Surge Ratings:	I_n = 20 kA (8/20 µs)
Open Circuit Voltage:	U_{oc} = 20 kV (1.2/50 µs)
IEC/EN Category:	Class II+III / Type 2+3
Protective Elements:	High Energy MOV
Housing:	Pluggable Design
Compliance:	IEC 61643-11:2011 EN 61643-11:2012

Technical Data

SLP20-xxx/3(S)		150	275	320	385	440
IEC Electrical						
Nominal AC Voltage (50/60 Hz)	U_o / U_n	120 V	230 V	230 V	230 V	400 V
Maximum Continuous Operating Voltage (AC)	U_C	150 V	275 V	320 V	385 V	440 V
Nominal Discharge Current (8/20 µs)	I_n	10 kA	10 kA	10 kA	10 kA	10 kA
Maximum Discharge Current (8/20 µs)	I_{max}	20 kA	20 kA	20 kA	20 kA	20 kA
Open Circuit Voltage (1.2/50 µs)	U_{oc}			20 kV		
Voltage Protection Level	U_p	600 V	1200 V	1400 V	1600 V	1800 V
Residual Current at U_c	I_{PE}			< 0.5 mA		
Response Time	t_A			< 25 ns		
Max. Backup Fuse				63 A gL / gG		
Short-Circuit Current Rating (AC)	I_{SCCR}			10 kA		
TOV Withstand 5 s	U_T	180 V	335 V	335 V	335 V	580 V
TOV 120 min	U_T	230 V	440 V	440 V	440 V	765 V
	mode	Withstand	Safe Fail	Safe Fail	Safe Fail	Safe Fail
Number of Ports				1		
Mechanical & Environmental						
Operating Temperature Range	T_a			-40 ºF to +158 ºF [-40 ºC to +70 ºC]		
Permissible Operating Humidity	RH			5% to 95%		
Atmospheric Pressure and Altitude				80 kPa to 106 kPa / -500 m to 2000 m		
Terminal Screw Torque	M_{max}			39.9 lbf·in [4.5 Nm]		
Conductor Cross Section (max.)				2 AWG (Solid, Stranded) / 4 AWG (Flexible)		
				35 mm² (Solid, Stranded) / 25 mm² (Flexible)		
Mounting				35 mm DIN Rail, EN 60715		
Degree of Protection				IP20 (built-in)		
Housing Material				Thermoplastic: Extinguishing Degree UL 94 V-0		
Thermal Protection				Yes		
Operating State / Fault Indication				Green ok / Red defect		
Remote Contacts (RC)				Optional		
RC Switching Capacity				AC: 250 V / 0.5 A; DC: 250 V / 0.1 A; 125 V / 0.2 A; 75 V / 0.5 A		
RC Conductor Cross Section (max.)				16 AWG (Solid) / 1.5 mm² (Solid)		
Order Information						
Ordering Code		150	275	320	385	440
SLP20-xxx/3		2015031	2027531	2032031	2038531	2044031
SLP20-xxx/3S (with remote contacts)		2015032	2027532	2032032	2038532	2044032
SLP20-xxx/0 (spare modules)		2015001	2027501	2032001	2038501	2044001

SLP20-xxx/3(S)

Internal Configuration

Legend

- L Line Conductor Terminal
- N Neutral Conductor Terminal
- ⏚ PE/G Conductor Terminal
- S Signalling Contacts Optional

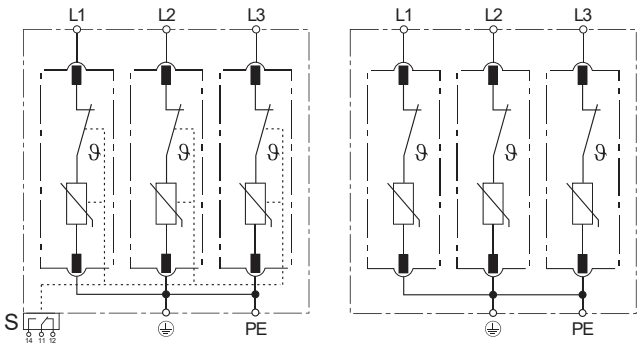

Dimensions & Packaging

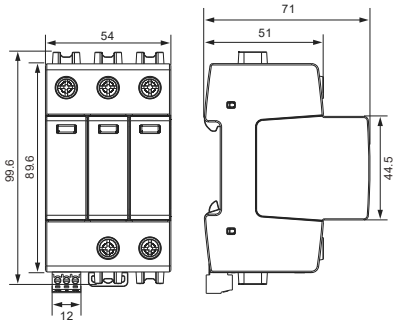

[mm]

Complete Unit					
SLP20-xxx/3(S)	150	275	320	385	440
DIN 43880 Dimension	1 CTN				
Packaging Dimensions (H x W x L)	[260 × 220 × 330 mm]				
Standard Order Quantity	30 Units				

Spare Plug

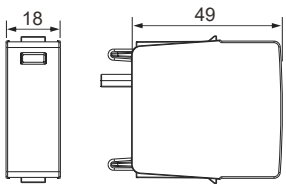

Single Unit					
SLP20-xxx/0	150	275	320	385	440
DIN 43880 Dimension	1 CTN				
Packaging Dimensions (H x W x L)	[260 × 220 × 330 mm]				
Standard Order Quantity	120 Units				

Connection Diagram

TN-C (Three-phase, 3+0)

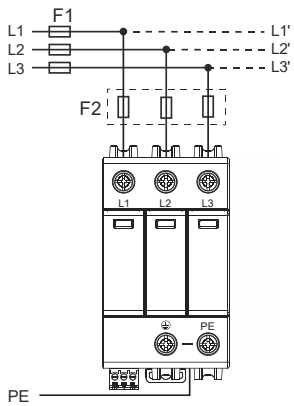

AC Surge Protective Device

SLP20-xxx/4(S)

Class II • Class III • Type 2 • Type 3

Location of Use:	Sub-Distribution Boards
Network Systems:	TN-S
Mode of Protection:	L-PE, N-PE
Surge Ratings:	I_n = 20 kA (8/20 µs)
Open Circuit Voltage:	U_{oc} = 20 kV (1.2/50 µs)
IEC/EN Category:	Class II+III / Type 2+3
Protective Elements:	High Energy MOV
Housing:	Pluggable Design
Compliance:	IEC 61643-11:2011 EN 61643-11:2012

Technical Data

SLP20-xxx/4(S)		150	275	320	385	440
IEC Electrical						
Nominal AC Voltage (50/60 Hz)	U_o / U_n	120 V	230 V	230 V	230 V	400 V
Maximum Continuous Operating Voltage (AC)	U_C	150 V	275 V	320 V	385 V	440 V
Nominal Discharge Current (8/20 µs)	I_n	10 kA	10 kA	10 kA	10 kA	10 kA
Maximum Discharge Current (8/20 µs)	I_{max}	20 kA	20 kA	20 kA	20 kA	20 kA
Open Circuit Voltage (1.2/50 µs)	U_{oc}			20 kV		
Voltage Protection Level	U_p	600 V	1200 V	1400 V	1600 V	1800 V
Residual Current at U_c	I_{PE}			< 0.5 mA		
Response Time	t_A			< 25 ns		
Max. Backup Fuse				63 A gL / gG		
Short-Circuit Current Rating (AC)	I_{SCCR}			10 kA		
TOV Withstand 5 s	U_T	180 V	335 V	335 V	335 V	580 V
TOV 120 min	U_T	230 V	440 V	440 V	440 V	765 V
	mode	Withstand	Safe Fail	Safe Fail	Safe Fail	Safe Fail
Number of Ports				1		
Mechanical & Environmental						
Operating Temperature Range	T_a			-40 ºF to +158 ºF [-40 ºC to +70 ºC]		
Permissible Operating Humidity	RH			5% to 95%		
Atmospheric Pressure and Altitude				80 kPa to 106 kPa / -500 m to 2000 m		
Terminal Screw Torque	M_{max}			39.9 lbf·in [4.5 Nm]		
Conductor Cross Section (max.)				2 AWG (Solid, Stranded) / 4 AWG (Flexible)		
				35 mm² (Solid, Stranded) / 25 mm² (Flexible)		
Mounting				35 mm DIN Rail, EN 60715		
Degree of Protection				IP20 (built-in)		
Housing Material				Thermoplastic: Extinguishing Degree UL 94 V-0		
Thermal Protection				Yes		
Operating State / Fault Indication				Green ok / Red defect		
Remote Contacts (RC)				Optional		
RC Switching Capacity				AC: 250 V / 0.5 A; DC: 250 V / 0.1 A; 125 V / 0.2 A; 75 V / 0.5 A		
RC Conductor Cross Section (max.)				16 AWG (Solid) / 1.5 mm² (Solid)		
Order Information						
Ordering Code		150	275	320	385	440
SLP20-xxx/4		2015041	2027541	2032041	2038541	2044041
SLP20-xxx/4S (with remote contacts)		2015042	2027542	2032042	2038542	2044042
SLP20-xxx/0 (spare modules)		2015001	2027501	2032001	2038501	2044001

Internal Configuration

Legend

- L Line Conductor Terminal
- N Neutral Conductor Terminal
- ⏚ PE/G Conductor Terminal
- S Signalling Contacts Optional

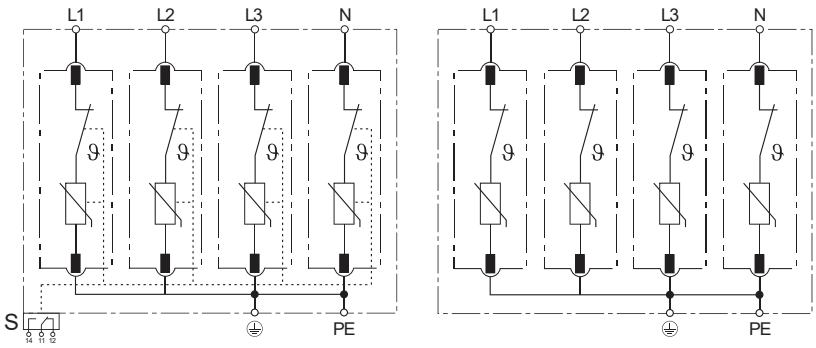

Dimensions & Packaging

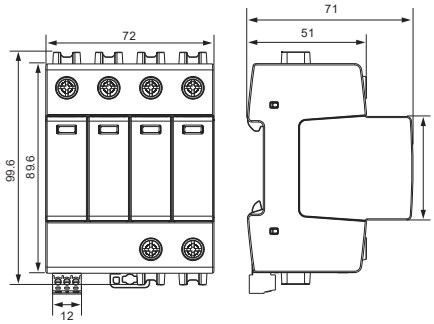

[mm]

Complete Unit					
SLP20-xxx/4(S)	150	275	320	385	440
DIN 43880 Dimension	1 CTN				
Packaging Dimensions (H x W x L)	[260 × 220 × 330 mm]				
Standard Order Quantity	24 Units				

Spare Plug

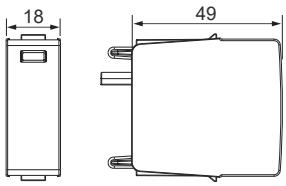

Single Unit					
SLP20-xxx/0	150	275	320	385	440
DIN 43880 Dimension	1 CTN				
Packaging Dimensions (H x W x L)	[260 × 220 × 330 mm]				
Standard Order Quantity	120 Units				

Connection Diagram

TN-S (Three-phase, 4+0)

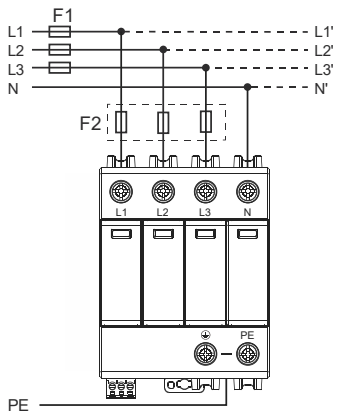

AC Surge Protective Device

SLP20-xxx/1(S)+1

Class II • Class III • Type 2 • Type 3

Location of Use:	Sub-Distribution Boards
Network Systems:	TT, TN-S
Mode of Protection:	L-N, N-PE
Surge Ratings:	I_n = 20 kA (8/20 µs)
Open Circuit Voltage:	U_{oc} = 20 kV (1.2/50 µs)
IEC/EN Category:	Class II+III / Type 2+3
Protective Elements:	High Energy MOV and GDT
Housing:	Pluggable Design
Compliance:	IEC 61643-11:2011 EN 61643-11:2012

Technical Data

SLP20-xxx/1(S)+1			75	150	275	320	385	440
IEC Electrical								
Nominal AC Voltage (50/60 Hz)			60 V	120 V	230 V	230 V	230 V	400 V
Maximum Continuous Operating Voltage	(L-N)	U_C	75 V	150 V	275 V	320 V	385 V	440 V
	(N-PE)	U_C	255 V					
Nominal Discharge Current (8/20 µs)	(L-N) / (N-PE)	I_n	10 kA /10 kA					
Maximum Discharge Current (8/20 µs)	(L-N) / (N-PE)	I_{max}	20 kA / 20 kA					
Open Circuit Voltage (1.2/50 µs)		U_{oc}	20 kV					
Voltage Protection Level	(L-N) / (N-PE)	U_p	0.3 kV / 1.0 kV	0.6 kV / 1.0 kV	1.2 kV / 1.0 kV	1.4 kV / 1.0 kV	1.6 kV / 1.0 kV	1.8 kV / 1.0 kV
Follow Current Interrupt Rating	(N-PE)	I_{fi}	100 A_{RMS}					
Residual Current at U_C		I_{PE}	none					
Response Time	(L-N) / (N-PE)	t_A	< 25 ns / < 100 ns					
Max. Backup Fuse			63 A gL / gG					
Short-Circuit Current Rating (AC)	(L-N)	I_{SCCR}	10 kA					
TOV Withstand 5 s	(L-N)	U_T	90 V	180 V	335 V	335 V	335 V	580 V
TOV 120 min	(L-N)	U_T	115 V	230 V	440 V	440 V	440 V	765 V
		mode	Withstand	Withstand	Safe Fail	Safe Fail	Safe Fail	Safe Fail
TOV Withstand 200 ms	(N-PE)	U_T	1200 V					
Number of Ports			1					
Mechanical & Environmental								
Operating Temperature Range		T_a	-40 ºF to +158 ºF [-40 ºC to +70 ºC]					
Permissible Operating Humidity		RH	5% to 95%					
Atmospheric Pressure and Altitude			80 kPa to 106 kPa / -500 m to 2000 m					
Terminal Screw Torque		M_{max}	39.9 lbf·in [4.5 Nm]					
Conductor Cross Section (max.)			2 AWG (Solid, Stranded) / 4 AWG (Flexible)					
			35 mm² (Solid, Stranded) / 25 mm² (Flexible)					
Mounting			35 mm DIN Rail, EN 60715					
Degree of Protection			IP20 (built-in)					
Housing Material			Thermoplastic: Extinguishing Degree UL 94 V-0					
Thermal Protection			Yes					
Operating State / Fault Indication			Green ok / Red defect					
Remote Contacts (RC)			Optional					
RC Switching Capacity			AC: 250 V / 0.5 A; DC: 250 V / 0.1 A; 125 V / 0.2 A; 75 V / 0.5 A					
RC Conductor Cross Section (max.)			16 AWG (Solid) / 1.5 mm² (Solid)					
Order Information								
Ordering Code			75	150	275	320	385	440
SLP20-xxx/1+1			2007513	2015013	2027513	2032013	2038513	2044013
SLP20-xxx/1S+1 (with remote contacts)			2007514	2015014	2027514	2032014	2038514	2044014
SLP20-xxx/0 (spare modules)			2007501	2015001	2027501	2032001	2038501	2044001
SLP20-255/0 (spare modules)			2025502	2025501	2025501	2025501	2025501	2025501

SLP20-xxx/1(S)+1

Internal Configuration

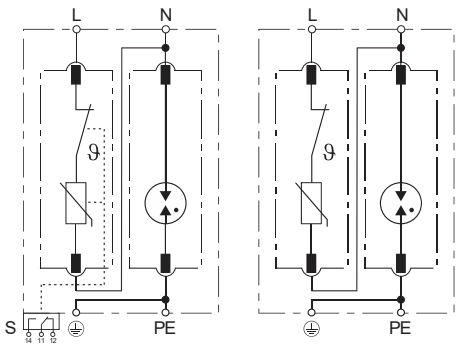

Legend

- L Line Conductor Terminal
- N Neutral Conductor Terminal
- ⏚ PE/G Conductor Terminal
- S Signalling Contacts Optional

Dimensions & Packaging

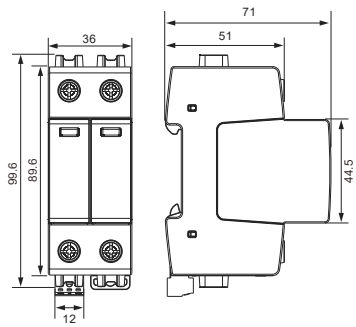

[mm]

Complete Unit						
SLP20-xxx/1(S)+1	75	150	275	320	385	440
DIN 43880 Dimension	1 CTN					
Packaging Dimensions (H x W x L)	[260 × 220 × 330 mm]					
Standard Order Quantity	48 Units					

Spare Plug

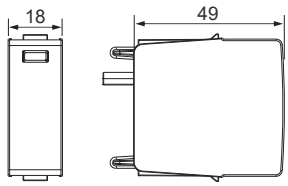

Single Unit						
SLP20-xxx/0	75	150	275	320	385	440
SLP20-255/0	255					
DIN 43880 Dimension	1 CTN					
Packaging Dimensions (H x W x L)	[260 × 220 × 330 mm]					
Standard Order Quantity	120 Units					

Connection Diagram

TN-S, TT (Single-phase, 1+1)

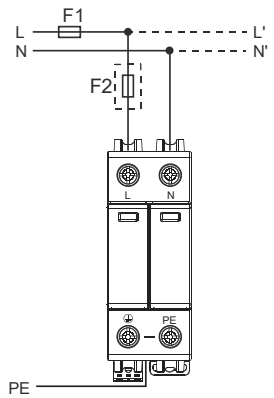

AC Surge Protective Device

SLP20-xxx/3(S)+1

Class II • Class III • Type 2 • Type 3

Location of Use:	Sub-Distribution Boards
Network Systems:	TT, TN-S
Mode of Protection:	L-N, N-PE
Surge Ratings:	I_n = 20 kA (8/20 µs)
Open Circuit Voltage:	U_{oc} = 20 kV (1.2/50 µs)
IEC/EN Category:	Class II+III / Type 2+3
Protective Elements:	High Energy MOV and GDT
Housing:	Pluggable Design
Compliance:	IEC 61643-11:2011 EN 61643-11:2012

Technical Data

SLP20-xxx/3(S)+1			150	275	320	385	440
IEC Electrical							
Nominal AC Voltage (50/60 Hz)			120 V	230 V	230 V	230 V	400 V
Maximum Continuous Operating Voltage	(L-N)	U_C	150 V	275 V	320 V	385 V	440 V
	(N-PE)	U_C			255 V		
Nominal Discharge Current (8/20 µs)	(L-N) / (N-PE)	I_n			10 kA /10 kA		
Maximum Discharge Current (8/20 µs)	(L-N) / (N-PE)	I_{max}			20 kA / 20 kA		
Open Circuit Voltage (1.2/50 µs)		U_{oc}			20 kV		
Voltage Protection Level	(L-N) / (N-PE)	U_p	0.6 kV / 1.0 kV	1.2 kV / 1.0 kV	1.4 kV / 1.0 kV	1.6 kV / 1.0 kV	1.8 kV / 1.0 kV
Follow Current Interrupt Rating	(N-PE)	I_{fi}			100 A_{RMS}		
Residual Current at U_C		I_{PE}			none		
Response Time	(L-N) / (N-PE)	t_A			< 25 ns / < 100 ns		
Max. Backup Fuse					63 A gL / gG		
Short-Circuit Current Rating (AC)	(L-N)	I_{SCCR}			10 kA		
TOV Withstand 5 s	(L-N)	U_T	180 V	335 V	335 V	335 V	580 V
TOV 120 min	(L-N)	U_T	230 V	440 V	440 V	440 V	765 V
		mode	Withstand	Safe Fail	Safe Fail	Safe Fail	Safe Fail
TOV Withstand 200 ms	(N-PE)	U_T			1200 V		
Number of Ports					1		
Mechanical & Environmental							
Operating Temperature Range		T_a			-40 ºF to +158 ºF [-40 ºC to +70 ºC]		
Permissible Operating Humidity		RH			5% to 95%		
Atmospheric Pressure and Altitude					80 kPa to 106 kPa / -500 m to 2000 m		
Terminal Screw Torque		M_{max}			39.9 lbf·in [4.5 Nm]		
Conductor Cross Section (max.)					2 AWG (Solid, Stranded) / 4 AWG (Flexible)		
					35 mm² (Solid, Stranded) / 25 mm² (Flexible)		
Mounting					35 mm DIN Rail, EN 60715		
Degree of Protection					IP20 (built-in)		
Housing Material					Thermoplastic: Extinguishing Degree UL 94 V-0		
Thermal Protection					Yes		
Operating State / Fault Indication					Green ok / Red defect		
Remote Contacts (RC)					Optional		
RC Switching Capacity					AC: 250 V / 0.5 A; DC: 250 V / 0.1 A; 125 V / 0.2 A; 75 V / 0.5 A		
RC Conductor Cross Section (max.)					16 AWG (Solid) / 1.5 mm² (Solid)		
Order Information							
Ordering Code			150	275	320	385	440
SLP20-xxx/3+1			2015033	2027533	2032033	2038533	2044033
SLP20-xxx/3S+1 (with remote contacts)			2015034	2027534	2032034	2038534	2044034
SLP20-xxx/0 (spare modules)			2015001	2027501	2032001	2038501	2044001
SLP20-255/0 (spare modules)			2025501	2025501	2025501	2025501	2025501

Internal Configuration

Legend

- L Line Conductor Terminal
- N Neutral Conductor Terminal
- ⏚ PE/G Conductor Terminal
- S Signalling Contacts Optional

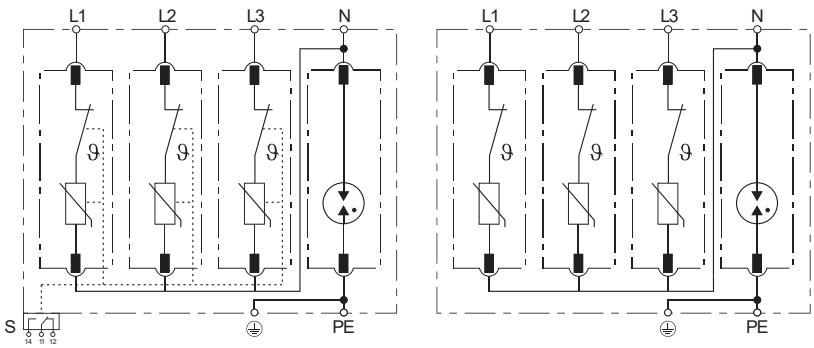

Dimensions & Packaging

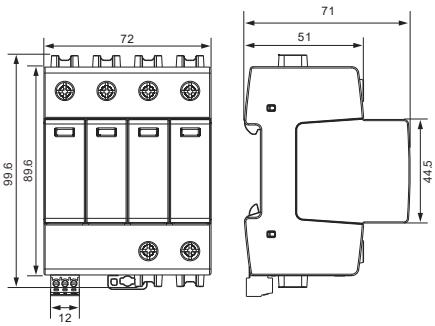

[mm]

Complete Unit					
SLP20-xxx/3(S)+1	150	275	320	385	440
DIN 43880 Dimension	1 CTN				
Packaging Dimensions (H x W x L)	[260 × 220 × 330 mm]				
Standard Order Quantity	24 Units				

Spare Plug

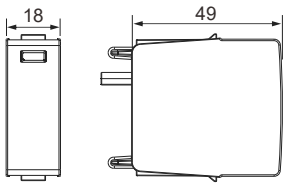

Single Unit					
SLP20-xxx/0	150	275	320	385	440
SLP20-255/0	255				
DIN 43880 Dimension	1 CTN				
Packaging Dimensions (H x W x L)	[260 × 220 × 330 mm]				
Standard Order Quantity	120 Units				

Connection Diagram

TN-S, TT (Three-phase, 3+1)

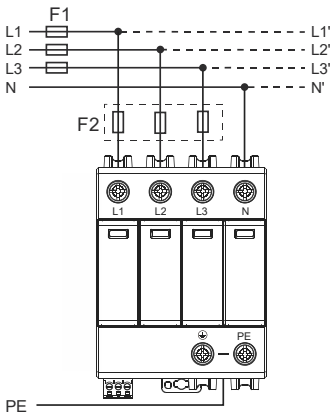

Compact AC Surge Protective Device

SLP20K-xxx/2(S)

Class II • Class III • Type 2 • Type 3

Location of Use:	Sub-Distribution Boards
Network Systems:	TN-S
Mode of Protection:	L-PE, N-PE
Surge Ratings:	I_n = 20 kA (8/20 µs)
Open Circuit Voltage:	U_{oc} = 20 kV (1.2/50 µs)
IEC/EN Category:	Class II+III / Type 2+3
Protective Elements:	High Energy MOV
Housing:	Pluggable Design
Compliance:	IEC 61643-11:2011 EN 61643-11:2012

Technical Data

SLP20K-xxx/2(S)		75	150	275	320	385	440
IEC Electrical							
Nominal AC Voltage (50/60 Hz)	U_o / U_n	60 V	120 V	230 V	230 V	230 V	400 V
Maximum Continuous Operating Voltage (AC)	U_C	75 V	150 V	275 V	320 V	385 V	440 V
Nominal Discharge Current (8/20 µs)	I_n	10 kA					
Maximum Discharge Current (8/20 µs)	I_{max}	20 kA					
Open Circuit Voltage (1.2/50 µs)	U_{oc}	20 kV					
Voltage Protection Level	U_p	400 V	1000 V	900 V	1200 V	1500 V	1800 V
Response Time	t_A	< 25 ns					
Max. Backup Fuse		63 A gL / gG					
Short-Circuit Current Rating (AC)	I_{SCCR}	10 kA					
TOV Withstand 5 s	U_T	90 V	180 V	335 V	335 V	335 V	580 V
TOV 120 min	U_T	115 V	230 V	440 V	440 V	440 V	765 V
	mode	Withstand	Withstand	Safe Fail	Safe Fail	Safe Fail	Safe Fail
Number of Ports		1					
Mechanical & Environmental							
Operating Temperature Range	T_a	-40 ºF to +158 ºF [-40 ºC to +70 ºC]					
Permissible Operating Humidity	RH	5% to 95%					
Atmospheric Pressure and Altitude		80 kPa to 106 kPa / -500 m to 2000 m					
Terminal Screw Torque	(L, N) M_{max}	13.3 lbf·in [1.5 Nm]					
	(PE) M_{max}	39.9 lbf·in [4.5 Nm]					
Conductor Cross Section (max.)	(L, N)	5 AWG (Solid, Stranded) / 7 AWG (Flexible)					
		16 mm² (Solid, Stranded) / 10 mm² (Flexible)					
Conductor Cross Section (max.)	(PE)	2 AWG (Solid, Stranded) / 4 AWG (Flexible)					
		35 mm² (Solid, Stranded) / 25 mm² (Flexible)					
Mounting		35 mm DIN Rail, EN 60715					
Degree of Protection		IP20 (built-in)					
Housing Material		Thermoplastic: Extinguishing Degree UL 94 V-0					
Thermal Protection		Yes					
Operating State / Fault Indication		Green ok / Red defect					
Remote Contacts (RC)		Optional					
RC Switching Capacity		AC: 250 V / 0.5 A; DC: 250 V / 0.1 A; 125 V / 0.2 A; 75 V / 0.5 A					
RC Conductor Cross Section (max.)		16 AWG (Solid) / 1.5 mm² (Solid)					
RC Terminal Screw Torque		2.2 lbf·in [0.25 Nm]					
Order Information							
Ordering Code		75	150	275	320	385	440
SLP20K-xxx/2		K2007521	K2015021	K2027521	K2032021	K2038521	K2044021
SLP20K-xxx/2S (with remote contacts)		K2007522	K2015022	K2027522	K2032022	K2038522	K2044022
SLP20K-xxx/0 (spare modules)		K2007501	K2015001	K2027501	K2032001	K2038501	K2044001

SLP20K-xxx/2(S)

Internal Configuration

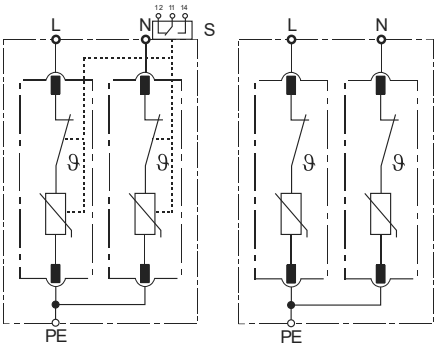

Legend

- L Line Conductor Terminal
- N Neutral Conductor Terminal
- ⏚ PE/G Conductor Terminal
- S Signalling Contacts Optional

Dimensions & Packaging

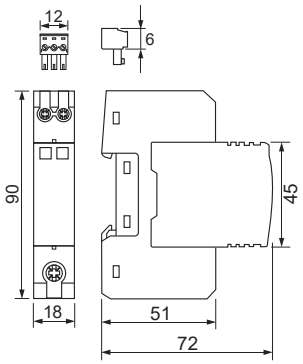

[mm]

Complete Unit						
SLP20K-xxx/2(S)	75	150	275	320	385	440
DIN 43880 Dimension	1 CTN					
Packaging Dimensions (H x W x L)	[260 × 220 × 330 mm]					
Standard Order Quantity	96 Units					

Spare Plug

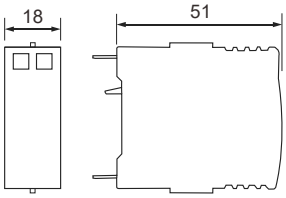

Single Unit						
SLP20K-xxx/0	75	150	275	320	385	440
DIN 43880 Dimension	1 CTN					
Packaging Dimensions (H x W x L)	[260 × 220 × 330 mm]					
Standard Order Quantity	120 Units					

Connection Diagram

TN-S (Single-phase, 2+0)

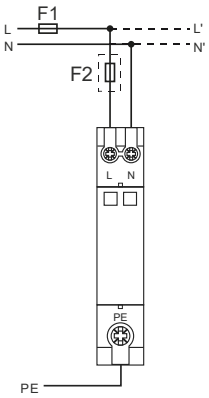

Compact AC Surge Protective Device

SLP20K-xxx/4(S)

Class II • Class III • Type 2 • Type 3

Location of Use: Sub-Distribution Boards
Network Systems: TN-S
Mode of Protection: L-PE, N-PE
Surge Ratings: I_n = 20 kA (8/20 µs)
Open Circuit Voltage: U_{oc} = 20 kV (1.2/50 µs)
IEC/EN Category: Class II+III / Type 2+3
Protective Elements: High Energy MOV
Housing: Pluggable Design
Compliance: IEC 61643-11:2011
EN 61643-11:2012

Technical Data

SLP20K-xxx/4(S)			150	275	320	385	440
IEC Electrical							
Nominal AC Voltage (50/60 Hz)		U_o / U_n	120 V	230 V	230 V	230 V	400 V
Maximum Continuous Operating Voltage (AC)		U_C	150 V	275 V	320 V	385 V	440 V
Nominal Discharge Current (8/20 µs)		I_n			10 kA		
Maximum Discharge Current (8/20 µs)		I_{max}			20 kA		
Open Circuit Voltage (1.2/50 µs)		U_{oc}			20 kV		
Voltage Protection Level		U_p	1000 V	1500 V	1600 V	1800 V	2000 V
Response Time		t_A			< 25 ns		
Max. Backup Fuse					63 A gL / gG		
Short-Circuit Current Rating (AC)		I_{SCCR}			10 kA		
TOV Withstand 5 s		U_T	180 V	335 V	335 V	335 V	580 V
TOV 120 min		U_T	230 V	440 V	440 V	440 V	765 V
		mode	Withstand	Safe Fail	Safe Fail	Safe Fail	Safe Fail
Number of Ports					1		
Mechanical & Environmental							
Operating Temperature Range		T_a	-40 ºF to +158 ºF [-40 ºC to +70 ºC]				
Permissible Operating Humidity		RH	5% to 95%				
Atmospheric Pressure and Altitude			80 kPa to 106 kPa / -500 m to 2000 m				
Terminal Screw Torque	(L, N)	M_{max}	13.3 lbf·in [1.5 Nm]				
	(PE)	M_{max}	39.9 lbf·in [4.5 Nm]				
Conductor Cross Section (max.)	(L, N)		5 AWG (Solid, Stranded) / 7 AWG (Flexible)				
			16 mm² (Solid, Stranded) / 10 mm² (Flexible)				
Conductor Cross Section (max.)	(PE)		2 AWG (Solid, Stranded) / 4 AWG (Flexible)				
			35 mm² (Solid, Stranded) / 25 mm² (Flexible)				
Mounting			35 mm DIN Rail, EN 60715				
Degree of Protection			IP20 (built-in)				
Housing Material			Thermoplastic: Extinguishing Degree UL 94 V-0				
Thermal Protection			Yes				
Operating State / Fault Indication			Green ok / Red defect				
Remote Contacts (RC)			Optional				
RC Switching Capacity			AC: 250 V / 0.5 A; DC: 250 V / 0.1 A; 125 V / 0.2 A; 75 V / 0.5 A				
RC Conductor Cross Section (max.)			16 AWG (Solid) / 1.5 mm² (Solid)				
RC Terminal Screw Torque			2.2 lbf·in [0.25 Nm]				
Order Information							
Ordering Code			150	275	320	385	440
SLP20K-xxx/4			K2015041	K2027541	K2032041	K2038541	K2044041
SLP20K-xxx/4S (with remote contacts)			K2015042	K2027542	K2032042	K2038542	K2044042
SLP20K-xxx/0 (spare modules)			K2015001	K2027501	K2032001	K2038501	K2044001

Internal Configuration

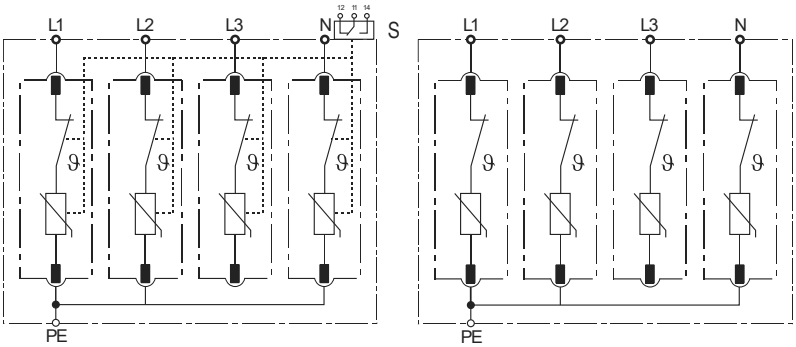

Legend

- L Line Conductor Terminal
- N Neutral Conductor Terminal
- ⏚ PE/G Conductor Terminal
- S Signalling Contacts Optional

Dimensions & Packaging

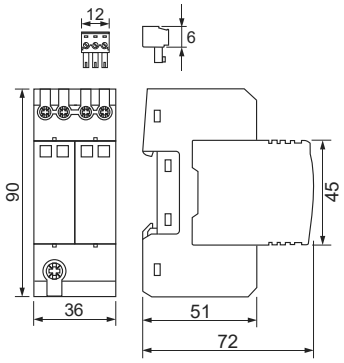

[mm]

Complete Unit					
SLP20K-xxx/4(S)	150	275	320	385	440
DIN 43880 Dimension	1 CTN				
Packaging Dimensions (H x W x L)	[260 × 220 × 330 mm]				
Standard Order Quantity	48 Units				

Spare Plug

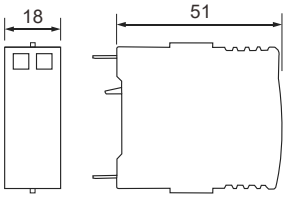

Single Unit					
SLP20K-xxx/0	150	275	320	385	440
DIN 43880 Dimension	1 CTN				
Packaging Dimensions (H x W x L)	[260 × 220 × 330 mm]				
Standard Order Quantity	120 Units				

Connection Diagram

TN-S (Three-phase, 4+0)

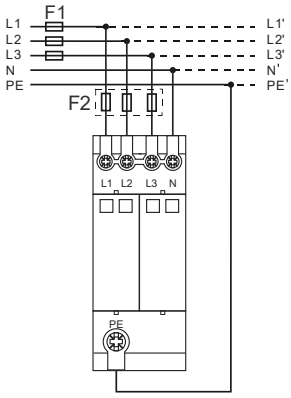

Compact AC Surge Protective Device

SLP20K-xxx/1(S)+1

Class II • Class III • Type 2 • Type 3

Location of Use:	Sub-Distribution Boards
Network Systems:	TT, TN-S
Mode of Protection:	L-N, N-PE
Surge Ratings:	I_n = 20 kA (8/20 µs)
Open Circuit Voltage:	U_{oc} = 20 kV (1.2/50 µs)
IEC/EN Category:	Class II+III / Type 2+3
Protective Elements:	High Energy MOV and GDT
Housing:	Pluggable Design
Compliance:	IEC 61643-11:2011 EN 61643-11:2012

Technical Data

SLP20K-xxx/1(S)+1			75	150	275	320	385	440
IEC Electrical								
Nominal AC Voltage (50/60 Hz)			60 V	120 V	230 V	230 V	230 V	400 V
Maximum Continuous Operating Voltage	(L-N)	U_C	75 V	150 V	275 V	320 V	385 V	440 V
	(N-PE)	U_C	255 V					
Nominal Discharge Current (8/20 µs)	(L-N) / (N-PE)	I_n	10 kA / 10 kA					
Maximum Discharge Current (8/20 µs)	(L-N) / (N-PE)	I_{max}	20 kA / 20 kA					
Open Circuit Voltage (1.2/50 µs)	(L-N) / (N-PE)	U_{oc}	20 kV					
Voltage Protection Level		U_p	0.3 kV / 1.0 kV	0.6 kV / 1.0 kV	0.9 kV / 1.0 kV	1.2 kV / 1.0 kV	1.5 kV / 1.0 kV	1.8 kV / 1.0 kV
Follow Current Interrupt Rating	(N-PE)	I_{fi}	100 A_{RMS}					
Response Time	(L-N) / (N-PE)	t_A	< 25 ns / < 100 ns					
Max. Backup Fuse			63 A gL / gG					
Short-Circuit Current Rating (AC)	(L-N)	I_{SCCR}	10 kA					
TOV Withstand 5 s	(L-N)	U_T	90 V	180 V	335 V	335 V	335 V	580 V
TOV 120 min	(L-N)	U_T	115 V	230 V	440 V	440 V	440 V	765 V
		mode	Withstand	Withstand	Safe Fail	Safe Fail	Safe Fail	Safe Fail
TOV Withstand 200 ms	(N-PE)	U_T	1200 V					
Number of Ports			1					
Mechanical & Environmental								
Operating Temperature Range		T_a	-40 ºF to +158 ºF [-40 ºC to +70 ºC]					
Permissible Operating Humidity		RH	5% to 95%					
Atmospheric Pressure and Altitude			80 kPa to 106 kPa / -500 m to 2000 m					
Terminal Screw Torque	(L, N)	M_{max}	13.3 lbf·in [1.5 Nm]					
	(PE)	M_{max}	39.9 lbf·in [4.5 Nm]					
Conductor Cross Section (max.)	(L, N)		5 AWG (Solid, Stranded) / 7 AWG (Flexible)					
			16 mm² (Solid, Stranded) / 10 mm² (Flexible)					
Conductor Cross Section (max.)	(PE)		2 AWG (Solid, Stranded) / 4 AWG (Flexible)					
			35 mm² (Solid, Stranded) / 25 mm² (Flexible)					
Mounting			35 mm DIN Rail, EN 60715					
Degree of Protection			IP20 (built-in)					
Housing Material			Thermoplastic: Extinguishing Degree UL 94 V-0					
Thermal Protection			Yes					
Operating State / Fault Indication			Green ok / Red defect					
Remote Contacts (RC)			Optional					
RC Switching Capacity			AC: 250 V / 0.5 A; DC: 250 V / 0.1 A; 125 V / 0.2 A; 75 V / 0.5 A					
RC Conductor Cross Section (max.)			16 AWG (Solid) / 1.5 mm² (Solid)					
RC Terminal Screw Torque			2.2 lbf·in [0.25 Nm]					
Order Information								
Ordering Code			75	150	275	320	385	440
SLP20K-xxx/1+1			K2007513	K2015013	K2027513	K2032013	K2038513	K2044013
SLP20K-xxx/1S+1 (with remote contacts)			K2007514	K2015014	K2027514	K2032014	K2038514	K2044014
SLP20K-xxx/255/0 (spare modules)			K2007502	K2015002	K2027502	K2032002	K2038502	K2044501

SLP20K-xxx/1(S)+1

Internal Configuration

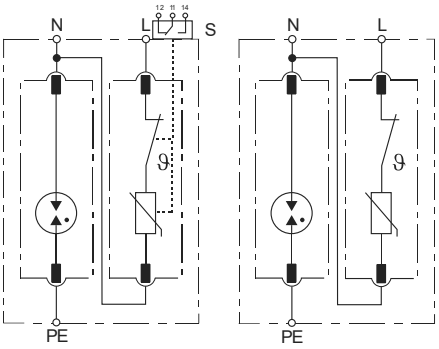

Legend

- L Line Conductor Terminal
- N Neutral Conductor Terminal
- ⏚ PE/G Conductor Terminal
- S Signalling Contacts Optional

Dimensions & Packaging

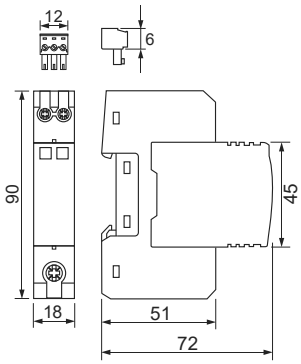

[mm]

Complete Unit						
SLP20K-xxx/1(S)+1	75	150	275	320	385	440
DIN 43880 Dimension	1 CTN					
Packaging Dimensions (H x W x L)	[260 × 220 × 330 mm]					
Standard Order Quantity	96 Units					

Spare Plug

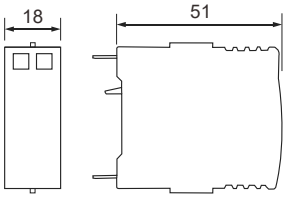

Single Unit						
SLP20K-xxx/255/0	75	150	275	320	385	440
DIN 43880 Dimension	1 CTN					
Packaging Dimensions (H x W x L)	[260 × 220 × 330 mm]					
Standard Order Quantity	120 Units					

Connection Diagram

TN-S, TT (Single-phase, 1+1)

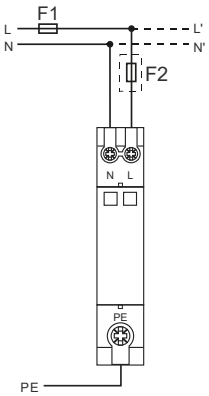

Compact AC Surge Protective Device

SLP20K-xxx/3(S)+1

Class II • Class III • Type 2 • Type 3

Location of Use:	Sub-Distribution Boards
Network Systems:	TT, TN-S
Mode of Protection:	L-N, N-PE
Surge Ratings:	I_n = 20 kA (8/20 µs)
Open Circuit Voltage:	U_{oc} = 20 kV (1.2/50 µs)
IEC/EN Category:	Class II+III / Type 2+3
Protective Elements:	High Energy MOV and GDT
Housing:	Pluggable Design
Compliance:	IEC 61643-11:2011 EN 61643-11:2012

Technical Data

SLP20K-xxx/3(S)+1			150	275	320	385	440
IEC Electrical							
Nominal AC Voltage (50/60 Hz)			120 V	230 V	230 V	230 V	400 V
Maximum Continuous Operating Voltage	(L-N)	U_C	150 V	275 V	320 V	385 V	440 V
	(N-PE)	U_C			255 V		
Nominal Discharge Current (8/20 µs)	(L-N) / (N-PE)	I_n			10 kA / 10 kA		
Maximum Discharge Current (8/20 µs)	(L-N) / (N-PE)	I_{max}			20 kA / 20 kA		
Open Circuit Voltage (1.2/50 µs)	(L-N) / (N-PE)	U_{oc}			20 kV		
Voltage Protection Level		U_p	0.6 kV / 1.0 kV	1.2 kV / 1.0 kV	1.4 kV / 1.0 kV	1.6 kV / 1.0 kV	1.8 kV / 1.0 kV
Follow Current Interrupt Rating	(N-PE)	I_{fi}			100 A_{RMS}		
Response Time	(L-N) / (N-PE)	t_A			< 25 ns / < 100 ns		
Max. Backup Fuse					63 A gL / gG		
Short-Circuit Current Rating (AC)	(L-N)	I_{SCCR}			10 kA		
TOV Withstand 5 s	(L-N)	U_T	180 V	335 V	335 V	335 V	580 V
TOV 120 min	(L-N)	U_T	230 V	440 V	440 V	440 V	765 V
		mode	Withstand	Safe Fail	Safe Fail	Safe Fail	Safe Fail
TOV Withstand 200 ms	(N-PE)	U_T			1200 V		
Number of Ports					1		
Mechanical & Environmental							
Operating Temperature Range		T_a	-40 ºF to +158 ºF [-40 ºC to +70 ºC]				
Permissible Operating Humidity		RH	5% to 95%				
Atmospheric Pressure and Altitude			80 kPa to 106 kPa / -500 m to 2000 m				
Terminal Screw Torque	(L, N)	M_{max}	13.3 lbf·in [1.5 Nm]				
	(PE)	M_{max}	39.9 lbf·in [4.5 Nm]				
Conductor Cross Section (max.)	(L, N)		5 AWG (Solid, Stranded) / 7 AWG (Flexible)				
			16 mm² (Solid, Stranded) / 10 mm² (Flexible)				
Conductor Cross Section (max.)	(PE)		2 AWG (Solid, Stranded) / 4 AWG (Flexible)				
			35 mm² (Solid, Stranded) / 25 mm² (Flexible)				
Mounting			35 mm DIN Rail, EN 60715				
Degree of Protection			IP20 (built-in)				
Housing Material			Thermoplastic: Extinguishing Degree UL 94 V-0				
Thermal Protection			Yes				
Operating State / Fault Indication			Green ok / Red defect				
Remote Contacts (RC)			Optional				
RC Switching Capacity			AC: 250 V / 0.5 A; DC: 250 V / 0.1 A; 125 V / 0.2 A; 75 V / 0.5 A				
RC Conductor Cross Section (max.)			16 AWG (Solid) / 1.5 mm² (Solid)				
RC Terminal Screw Torque			2.2 lbf·in [0.25 Nm]				
Order Information							
Ordering Code			150	275	320	385	440
SLP20K-xxx/3+1			K2015033	K2027533	K2032033	K2038533	K2044033
SLP20K-xxx/3S+1 (with remote contacts)			K2015034	K2027534	K2032034	K2038534	K2044034
SLP20K-xxx/0 (spare modules)			K2015001	K2027501	K2032001	K2038501	K2044001
SLP20K-xxx/255/0 (spare modules)			K2015502	K2027502	K2032002	K2038502	K2044002

Internal Configuration

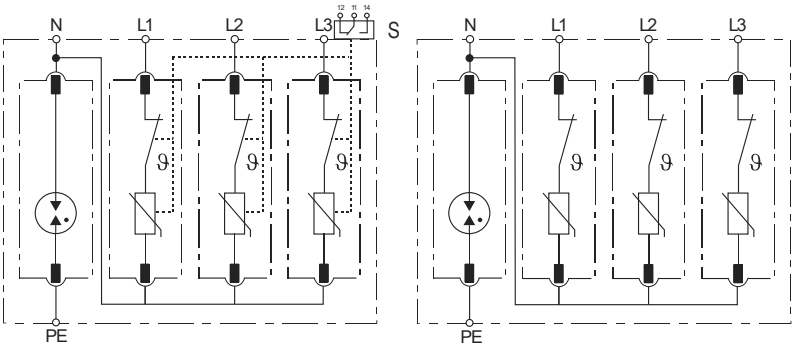

Legend

- L Line Conductor Terminal
- N Neutral Conductor Terminal
- ⏚ PE/G Conductor Terminal
- S Signalling Contacts Optional

Dimensions & Packaging

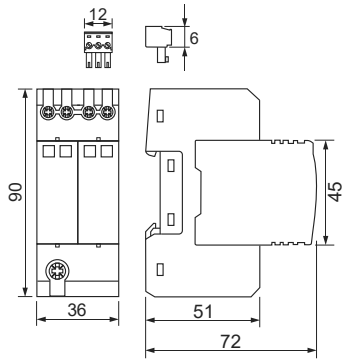

[mm]

Complete Unit					
SLP20K-xxx/3(S)+1	150	275	320	385	440
DIN 43880 Dimension	1 CTN				
Packaging Dimensions (H x W x L)	[260 × 220 × 330 mm]				
Standard Order Quantity	48 Units				

Spare Plug

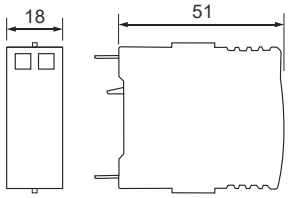

Single Unit					
SLP20K-xxx/0	150	275	320	385	440
SLP40K-xxx/255/0	150	275	320	385	440
DIN 43880 Dimension	1 CTN				
Packaging Dimensions (H x W x L)	[260 × 220 × 330 mm]				
Standard Order Quantity	120 Units				

Connection Diagram

TN-S, TT (Three-phase, 3+1)

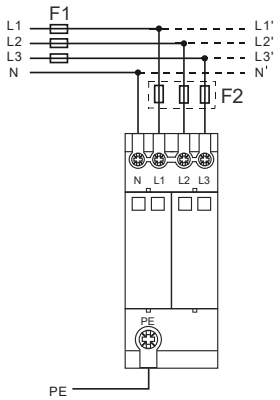

AC Surge Protective Device

TLP-xxx/2(S)

Class III • Type 3

- Monobloc design and DIN rail installation
- Visual and remote status indication
- High discharge capacity due to heavy-duty zinc oxide varistor / GDT combination
- Reliable thermal disconnect device
- Energy coordination with other arresters of LSP product family

DIN rail, compact Type 3 / Class III SPD with MOV & GDT and narrow design for protecting industrial electronic systems and equipments at boundaries from LPZ 1-3 and higher.

Technical Data

TLP-xxx/2(S)	30	60	75	150	255
IEC Electrical					
SPD according to IEC 61643-11 / EN 61643-11			Class III / Type 3		
Nominal AC Voltage (U_n)	24 V (50/60 Hz)	48 V (50/60 Hz)	60 V (50/60 Hz)	120 V (50/60 Hz)	230 V (50/60 Hz)
Maximum Continuous Operating AC Voltage (U_C)	30 V (50/60 Hz)	60 V (50/60 Hz)	75 V (50/60 Hz)	150 V (50/60 Hz)	255 V (50/60 Hz)
Maximum Continuous Operating DC Voltage (U_C)	30 V	30 V	75 V	30 V	255 V
Nominal Load Current AC (I_L)			25 A		
Nominal Discharge Current (8/20 µs) (I_n)	1 kA	1 kA	2 kA	2 kA	3 kA
Total Discharge Current (8/20 µs) [1+2-PE] (I_{total})	2 kA	2 kA	4 kA	4 kA	5 kA
Combination Wave (U_{oc})	2 kV	2 kV	4 kV	4 kV	6 kV
Combination Wave [1+2-PE] ($U_{oc\ total}$)	4 kV	4 kV	8 kV	8 kV	10 kV
Voltage Protection Level [1-2] (U_P)	≤ 180 V	≤ 350 V	≤ 400 V	≤ 640 V	≤ 1250 V
Voltage Protection Level [1/2-PE] (U_P)	≤ 600 V	≤ 730 V	≤ 730 V	≤800 V	≤ 1500 V
Response Time [1-2] (t_A)			≤ 25 ns		
Response Time [1/2-PE] (t_A)			≤ 100 ns		
Maximum Mains-Side Overcurrent Protection			25 A gL / gG		
Short-Circuit Withstand Capability for Mains-Side Overcurrent Protection with 25 A gL / gG (I_{SCCR})			6 kA_{rms}		
Temporary Overvoltage (TOV) [1-2] U_T	-	-	-	-	335 V / 5 sec.
Temporary Overvoltage (TOV) [1/2-PE] (I) U_T	-	-	-	-	440 V / 5 sec.
Temporary Overvoltage (TOV) [1+2-PE] (II) U_T	-	-	-	-	1200 V + U_{REF} / 200 ms
Operating Temperature Range (T_a)			-40 °C to +80 °C		
Operating State / Fault Indication			Green ok / Red defect		
Number of Ports			1		
Cross-sectional Area (min.)			0.5 mm^2 Solid / Flexible		
Cross-sectional Area (max.)			4 mm^2 Solid / 2.5 mm^2 Flexible		
For Mounting on			35 mm DIN Rails acc. to EN 60715		
Enclosure Material			Thermoplastic, UL. 94 V-0		
Place of Installation			Indoor Installation		
Degree of Protection			IP20		
Capacity			1 Module (s), DIN 43880		
Approvals			CE		
Remote Contact (RC)			Optional		
AC Switching Capacity			250 V / 0.5 A		
DC Switching Capacity			250 V / 0.1 A; 125 V / 0.2 A; 75 V / 0.5 A		
Cross-Sectional Area for Remote Signalling Terminals			Max. 1.5 mm^2 Solid / Flexible		
Order Information					
Ordering Code	30	60	75	150	255
TLP-xxx/2	0103021	0106021	0207521	0215021	0325521
TLP-xxx/2S (with remote contacts)	0103022	0106022	0207522	0215022	0325522

Internal Configuration

Legend

- 1/3 Conductor Terminal
- 2/4 Conductor Terminal
- ⏚ PE/G Conductor Terminal
- S Signalling Contacts Optional

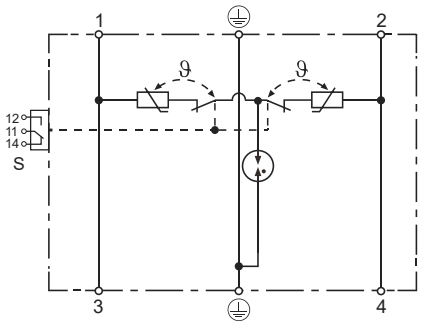

Dimensions & Packaging

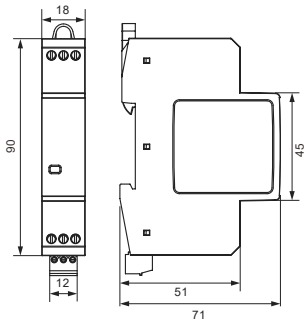

[mm]

Complete Unit					
TLP-xxx/2(S)	30	60	75	150	255
DIN 43880 Dimension	1 CTN				
Packaging Dimensions (H x W x L)	[260 × 220 × 330 mm]				
Standard Order Quantity	96 Units				

Connection Diagram

TN-S, TN-C, TT (Single-phase)

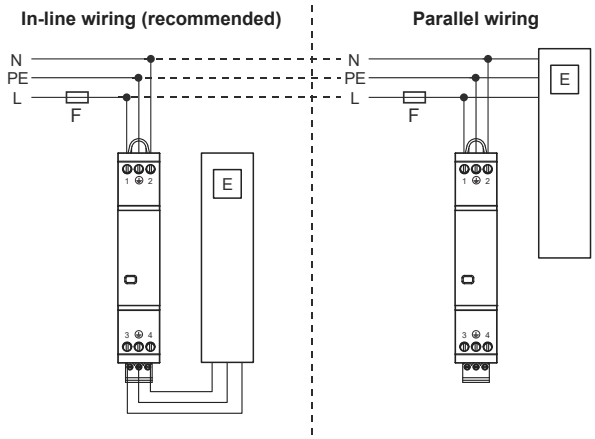

DC Surge Protective Device

FLP25-DC75 Series

Class I • Class II • Type 1 • Type 2

Location of Use: String box, Inverter
Network Systems: (DC+/-)-PE, (DC-)-(DC+) and (DC+)-PE
Surge Ratings: I_{imp} = 25 kA (10/350 µs)
I_n = 25 kA (8/20 µs)
IEC/EN Category: Class I+II / Type 1+2
Protective Elements: High Energy MOV and GDT
Housing: Monoblock Design
Compliance: IEC/EN 61643-41

Technical Data

48 Vdc Power Surge Protector		FLP25-DC75/1(S)	FLP25-DC75/1(S)+1
IEC Electrical			
Rated Operational DC Voltage	U_o / U_n	48 Vdc	
Connection Mode		(DC+)-PE or (DC-)-PE	(DC-)-(DC+) and (DC+)-PE
Protection Mode(s)		CM	DM / CM
Maximum Continuous Operating DC Voltage	U_{cdc}	75 Vdc	75 Vdc / 255 Vdc
Residual Current - Leakage Current at U_{cdc}	I_{pe}	<0.1 mA	without
Nominal Discharge Current -15 x 8/20 µs Impulses	I_n	25 kA	25 kA / 50 kA
Maximum Discharge Current Maximum Withstand 8/20 µs	I_{max}	70 kA	70 kA
Impulse Discharge Current Maximum Withstand 10/350 µs	I_{imp}	25 kA	25 kA / 50 kA
Total Lightning Current Maximum Total Withstand 10/350 µs	I_{total}	-	50 kA
Voltage Protection Level	U_p	0.5 kV	0.5 kV / 1.5 kV
Response Time	t_A	< 25 ns	
Number of Ports		1	
Mechanical & Environmental			
Operating Temperature Range	T_a	-40 ºF to +158 ºF [-40 ºC to +70 ºC]	
Permissible Operating Humidity	RH	5% to 95%	
Atmospheric Pressure and Altitude		80 kPa to 106 kPa / -500 m to 2000 m	
Terminal Screw Torque	M_{max}	39.9 lbf·in [4.5 Nm]	
Conductor Cross Section (max.)		2 AWG (Solid, Stranded) / 4 AWG (Flexible)	
		35 mm² (Solid, Stranded) / 25 mm² (Flexible)	
Mounting		35 mm DIN Rail, EN 60715	
Degree of Protection		IP20 (built-in)	
Housing Material		Thermoplastic: Extinguishing Degree UL 94 V-0	
Thermal Protection		Yes	
Operating State / Fault Indication		White ok / Red defect	
Remote Contacts (RC)		Optional	
RC Switching Capacity		AC: 250 V / 0.5 A; DC: 250 V / 0.1 A; 125 V / 0.2 A; 75 V / 0.5 A	
RC Conductor Cross Section (max.)		16 AWG (Solid) / 1.5 mm² (Solid)	
Order Information			
Ordering Code		FLP25-DC75/1(S)	FLP25-DC75/1(S)+1
Without remote contacts		2507511	2507513
With remote contacts		2507512	2507514

Internal Configuration

Legend

- ⏚ PE/G Conductor Terminal
- S Signalling Contacts Optional

FLP25-DC75/1(S)

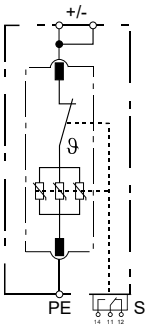

FLP25-DC75/1(S)+1

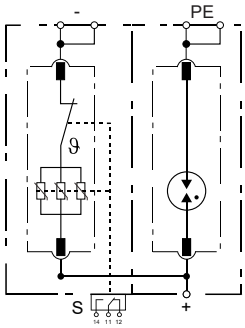

Dimensions & Packaging

FLP25-DC75/1(S) FLP25-DC75/1(S)+1

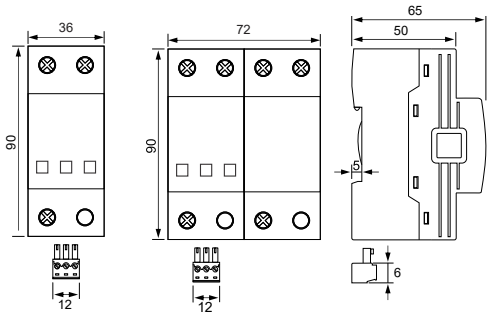

[mm]

Complete Unit		
	FLP25-DC75/1(S)	FLP25-DC75/1(S)+1
DIN 43880 Dimension	1 CTN	
Packaging Dimensions (H x W x L)	[260 × 220 × 330 mm]	
Standard Order Quantity	42 Units	24 Units

Connection Diagram

FLP25-DC75/1(S)

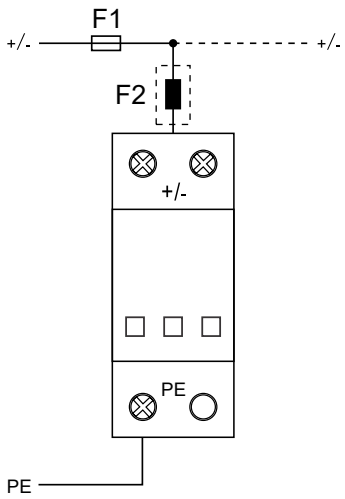

FLP25-DC75/1(S)+1

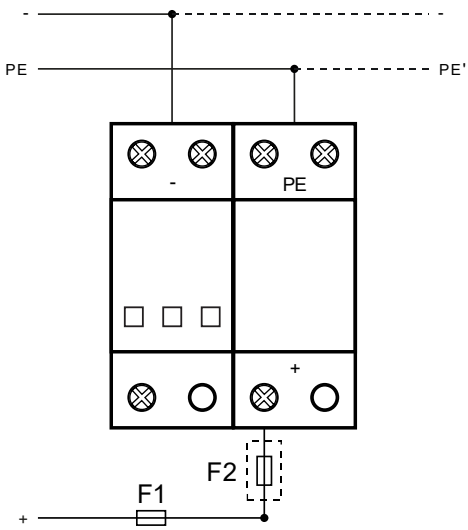

DC Surge Protective Device

FLP7-DC65/2(S)

Class I • Class II • Type 1 • Type 2

Location of Use: String box, Inverter
Network Systems: (DC+/-)-PE, (DC-/+)-PE
Surge Ratings: I_{imp} = 7 kA (10/350 µs)
I_n = 30 kA (8/20 µs)
IEC/EN Category: Class I+II / Type 1+2
Protective Elements: High Energy MOV
Housing: Pluggable Design
Compliance: IEC/EN 61643-41

Technical Data

FLP7-DCxxx/2(S)		65
IEC Electrical		
Rated Operational DC Voltage	U_o / U_n	48 Vdc
Maximum Continuous Operating DC Voltage (DC+)-PE, (DC-)-PE	U_{cdc}	65 Vdc
Residual Current - Leakage Current at U_{cdc}	I_{pe}	< 0.5 mA
Nominal Discharge Current -15 x 8/20 µs Impulses	I_n	30 kA
Maximum Discharge Current Maximum Withstand 8/20 µs	I_{max}	70 kA
Impulse Discharge Current Maximum Withstand 10/350 µs	I_{imp}	7 kA
Total Lightning Current Maximum Total Withstand 10/350 µs	I_{total}	14 kA
Voltage Protection Level	U_p	0.3 kV
Response Time	t_A	< 25 ns
Number of Ports		1
Mechanical & Environmental		
Operating Temperature Range	T_a	-40 ºF to +158 ºF [-40 ºC to +70 ºC]
Permissible Operating Humidity	RH	5% to 95%
Atmospheric Pressure and Altitude		80 kPa to 106 kPa / -500 m to 2000 m
Terminal Screw Torque	M_{max}	39.9 lbf·in [4.5 Nm]
Conductor Cross Section (max.)		2 AWG (Solid, Stranded) / 4 AWG (Flexible)
		35 mm² (Solid, Stranded) / 25 mm² (Flexible)
Mounting		35 mm DIN Rail, EN 60715
Degree of Protection		IP20 (built-in)
Housing Material		Thermoplastic: Extinguishing Degree UL 94 V-0
Thermal Protection		Yes
Operating State / Fault Indication		Green ok / Red defect
Remote Contacts (RC)		Optional
RC Switching Capacity		AC: 250 V / 0.5 A; DC: 250 V / 0.1 A; 125 V / 0.2 A; 75 V / 0.5 A
RC Conductor Cross Section (max.)		16 AWG (Solid) / 1.5 mm² (Solid)
Order Information		
Ordering Code		65
FLP7-DCxxx/2		0706521
FLP7-DCxxx/2S (with remote contacts)		0706522
FLP7-DCxxx/0 (spare modules)		0706501

FLP7-DCxxx/2(S)

Internal Configuration

Legend

- ⏚ PE/G Conductor Terminal
- S Signalling Contacts Optional

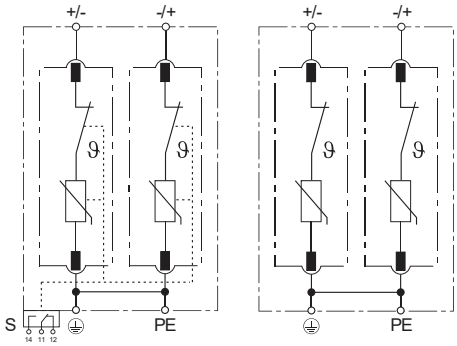

Dimensions & Packaging

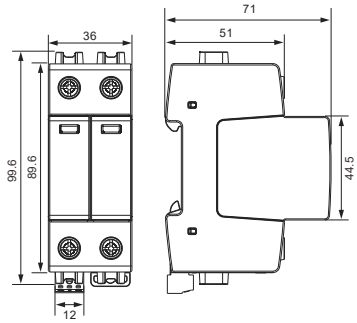

[mm]

Complete Unit	
FLP7-DCxxx/2(S)	65
DIN 43880 Dimension	1 CTN
Packaging Dimensions (H x W x L)	[260 × 220 × 330 mm]
Standard Order Quantity	48 Units

Spare Plug

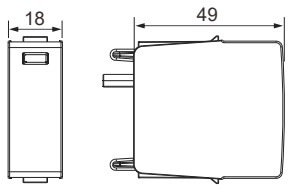

Single Unit	
FLP7-DCxxx/0	65
DIN 43880 Dimension	1 CTN
Packaging Dimensions (H x W x L)	[260 × 220 × 330 mm]
Standard Order Quantity	120 Units

Connection Diagram

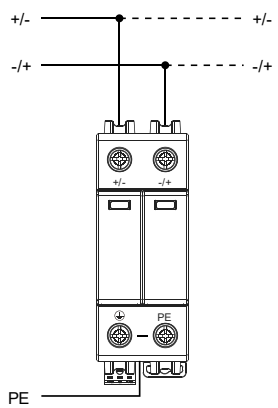

DC Surge Protective Device

FLP-DCxxx/2(S)

Class I • Class II • Type 1 • Type 2

Location of Use: String box, Inverter
Network Systems: (DC+/-)-PE, (DC-/+)-PE
Surge Ratings: I_{imp} = 4 kA (10/350 µs)
I_n = From 15 kA to 20 kA (8/20 µs)
IEC/EN Category: Class I+II / Type 1+2
Protective Elements: High Energy MOV
Housing: Pluggable Design
Compliance: IEC/EN 61643-41

Technical Data

FLP-DCxxx/2(S)		65	85
IEC Electrical			
Rated Operational DC Voltage	U_o / U_n	48 Vdc	75 Vdc
Maximum Continuous Operating DC Voltage	U_{cdc}	65 Vdc	85 Vdc
Residual Current - Leakage Current at U_{cdc}	I_{pe}	< 0.1 mA	
Nominal Discharge Current -15 x 8/20 µs Impulses	I_n	15 kA	20 kA
Maximum Discharge Current Maximum Withstand 8/20 µs	I_{max}	30 kA	40 kA
Impulse Discharge Current Maximum Withstand 10/350 µs	I_{imp}	4 kA	
Total Lightning Current Maximum Total Withstand 10/350 µs	I_{total}	8 kA	
Voltage Protection Level	U_p	0.3 kV	0.39 kV
Response Time	t_A	< 25 ns	
Number of Ports		1	
Mechanical & Environmental			
Operating Temperature Range	T_a	-40 ºF to +158 ºF [-40 ºC to +70 ºC]	
Permissible Operating Humidity	RH	5% to 95%	
Atmospheric Pressure and Altitude		80 kPa to 106 kPa / -500 m to 2000 m	
Terminal Screw Torque	M_{max}	39.9 lbf·in [4.5 Nm]	
Conductor Cross Section (max.)		2 AWG (Solid, Stranded) / 4 AWG (Flexible)	
		35 mm² (Solid, Stranded) / 25 mm² (Flexible)	
Mounting		35 mm DIN Rail, EN 60715	
Degree of Protection		IP20 (built-in)	
Housing Material		Thermoplastic: Extinguishing Degree UL 94 V-0	
Thermal Protection		Yes	
Operating State / Fault Indication		Green ok / Red defect	
Remote Contacts (RC)		Optional	
RC Switching Capacity		AC: 250 V / 0.5 A; DC: 250 V / 0.1 A; 125 V / 0.2 A; 75 V / 0.5 A	
RC Conductor Cross Section (max.)		16 AWG (Solid) / 1.5 mm² (Solid)	
Order Information			
Ordering Code		65	85
FLP-DCxxx/2 (without remote contacts)		0406521	0408521
FLP-DCxxx/2S (with remote contacts)		0406522	0408522
FLP-DCxxx/0 (spare modules)		0406501	0408501

Internal Configuration

Legend

- ⏚ PE/G Conductor Terminal
- S Signalling Contacts Optional

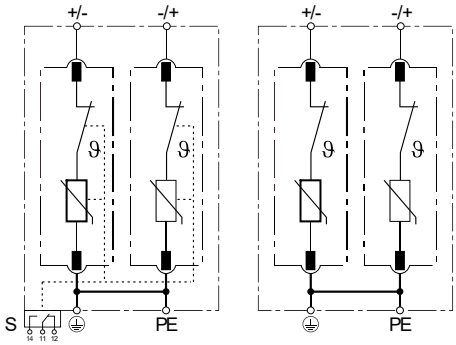

Dimensions & Packaging

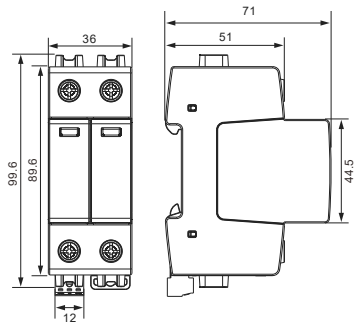

[mm]

Complete Unit		
FLP-DCxxx/2(S)	FLP-DC65/2(S)	FLP-DC85/2(S)
DIN 43880 Dimension	1 CTN	
Packaging Dimensions (H x W x L)	[260 × 220 × 330 mm]	
Standard Order Quantity	48 Units	

Spare Plug

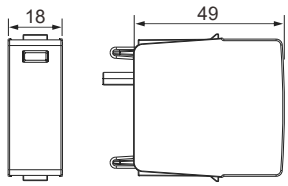

Single Unit		
FLP7-DCxxx/0	FLP-DC65/0	FLP-DC85/0
DIN 43880 Dimension	1 CTN	
Packaging Dimensions (H x W x L)	[260 × 220 × 330 mm]	
Standard Order Quantity	120 Units	

Connection Diagram

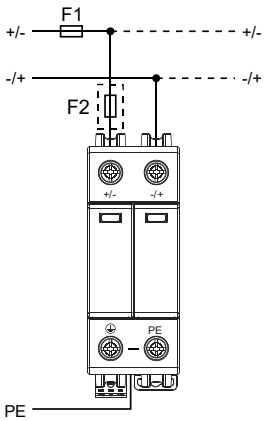

DC Surge Protective Device

SLP40-DCxxx/2(S)

Class II • Type 2

Location of Use: String box, Inverter
Network Systems: (DC+/-)-PE, (DC-/+)-PE
Surge Ratings: I_n = 20 kA (8/20 µs)
I_{total} = 40 kA (8/20 µs)
IEC/EN Category: Class II / Type 2
Protective Elements: High Energy MOV
Housing: Pluggable Design
Compliance: IEC/EN 61643-41

Technical Data

SLP40-DCxxx/2(S)		100	125	150	180	275	350	460
IEC Electrical								
Rated Operational DC Voltage	U_o / U_n	75 Vdc	95 Vdc	100 Vdc	130 Vdc	220 Vdc	280 Vdc	350 Vdc
Maximum Continuous Operating DC Voltage (DC+)-PE, (DC-)-PE	U_{cdc}	100 Vdc	125 Vdc	150 Vdc	180 Vdc	275 Vdc	350 Vdc	460 Vdc
Nominal Discharge Current (8/20 µs)	I_n	20 kA						
Total Discharge Current (8/20 µs)	I_{total}	40 kA						
Maximum Discharge Current (8/20 µs)	I_{max}	40 kA						
Voltage Protection Level (DC+)-PE, (DC-)-PE	U_p	550 V	600 V	800 V	900 V	1000 V	1500 V	1800 V
Residual Current at U_{cdc}	I_{PE}	< 0.5 mA						
Response Time	t_A	< 25 ns						
Number of Ports		1						
Mechanical & Environmental								
Operating Temperature Range	T_a	-40 ºF to +158 ºF [-40 ºC to +70 ºC]						
Permissible Operating Humidity	RH	5% to 95%						
Atmospheric Pressure and Altitude		80 kPa to 106 kPa / -500 m to 2000 m						
Terminal Screw Torque	M_{max}	39.9 lbf·in [4.5 Nm]						
Conductor Cross Section (max.)		2 AWG (Solid, Stranded) / 4 AWG (Flexible)						
		35 mm² (Solid, Stranded) / 25 mm² (Flexible)						
Mounting		35 mm DIN Rail, EN 60715						
Degree of Protection		IP20 (built-in)						
Housing Material		Thermoplastic: Extinguishing Degree UL 94 V-0						
Thermal Protection		Yes						
Operating State / Fault Indication		Green ok / Red defect						
Remote Contacts (RC)		Optional						
RC Switching Capacity		AC: 250 V / 0.5 A; DC: 250 V / 0.1 A; 125 V / 0.2 A; 75 V / 0.5 A						
RC Conductor Cross Section (max.)		16 AWG (Solid) / 1.5 mm² (Solid)						
Order Information								
Ordering Code		100	125	150	180	275	350	460
SLP40-DCxxx/2		4010021	4012521	4015025	4018021	4027525	4035021	4046021
SLP40-DCxxx/2S (with remote contacts)		4010022	4012522	4015026	4018022	4027526	4035022	40446022
SLP40-DCxxx/0 (spare modules)		4010002	4012502	4015002	4018002	4027502	4035002	40460022

Internal Configuration

Legend

- ⏚ PE/G Conductor Terminal
- S Signalling Contacts Optional

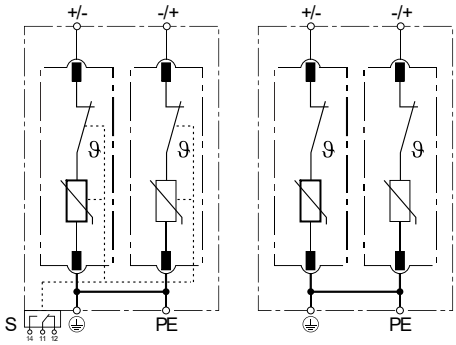

Dimensions & Packaging

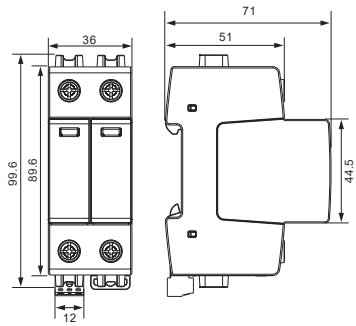

[mm]

Complete Unit							
SLP40-DCxxx/2(S)	100	125	150	180	275	350	460
DIN 43880 Dimension	1 CTN						
Packaging Dimensions (H x W x L)	[260 × 220 × 330 mm]						
Standard Order Quantity	48 Units						

Spare Plug

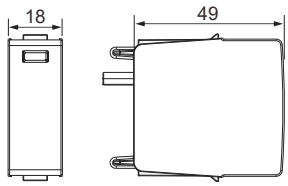

Single Unit							
SLP40-DCxxx/0	100	125	150	180	275	350	460
DIN 43880 Dimension	1 CTN						
Packaging Dimensions (H x W x L)	[260 × 220 × 330 mm]						
Standard Order Quantity	120 Units						

Connection Diagram

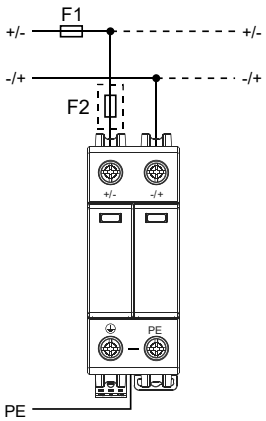

DC Surge Protective Device

SLP30-DC65/2(S)

Class II • Type 2

Location of Use: String box, Inverter
Network Systems: (DC+/-)-PE, (DC-/+)-PE
Surge Ratings: I_n = 15 kA (8/20 µs)
I_{total} = 30 kA (8/20 µs)
IEC/EN Category: Class II / Type 2
Protective Elements: High Energy MOV
Housing: Pluggable Design
Compliance: IEC/EN 61643-41

Technical Data

SLP30-DCxxx/2(S)		65
IEC Electrical		
Rated Operational DC Voltage	U_o / U_n	48 Vdc
Maximum Continuous Operating DC Voltage (DC+)-PE, (DC-)-PE	U_{cdc}	65 V
Nominal Discharge Current (8/20 µs)	I_n	15 kA
Total Discharge Current (8/20 µs)	I_{total}	30 kA
Maximum Discharge Current (8/20 µs)	I_{max}	30 kA
Voltage Protection Level (DC+)-PE, (DC-)-PE	U_p	0.3 kV
Residual Current at U_{cdc}	I_{PE}	< 0.5 mA
Response Time	t_A	< 25 ns
Number of Ports		1
Mechanical & Environmental		
Operating Temperature Range	T_a	-40 ºF to +158 ºF [-40 ºC to +70 ºC]
Permissible Operating Humidity	RH	5% to 95%
Atmospheric Pressure and Altitude		80 kPa to 106 kPa / -500 m to 2000 m
Terminal Screw Torque	M_{max}	39.9 lbf·in [4.5 Nm]
Conductor Cross Section (max.)		2 AWG (Solid, Stranded) / 4 AWG (Flexible)
		35 mm² (Solid, Stranded) / 25 mm² (Flexible)
Mounting		35 mm DIN Rail, EN 60715
Degree of Protection		IP20 (built-in)
Housing Material		Thermoplastic: Extinguishing Degree UL 94 V-0
Thermal Protection		Yes
Operating State / Fault Indication		Green ok / Red defect
Remote Contacts (RC)		Optional
RC Switching Capacity		AC: 250 V / 0.5 A; DC: 250 V / 0.1 A; 125 V / 0.2 A; 75 V / 0.5 A
RC Conductor Cross Section (max.)		16 AWG (Solid) / 1.5 mm² (Solid)
Order Information		
Ordering Code		65
SLP30-DCxxx/2		3006521
SLP30-DCxxx/2S (with remote contacts)		3006522
SLP30-DCxxx/0 (spare modules)		3006501

Internal Configuration

Legend

- ⏚ PE/G Conductor Terminal
- S Signalling Contacts Optional

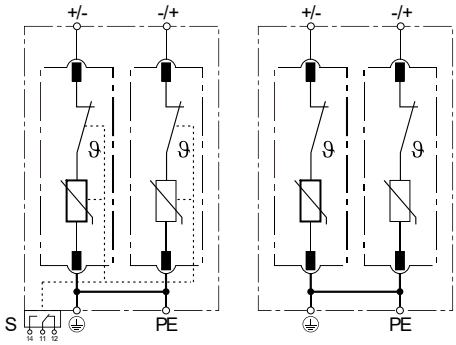

Dimensions & Packaging

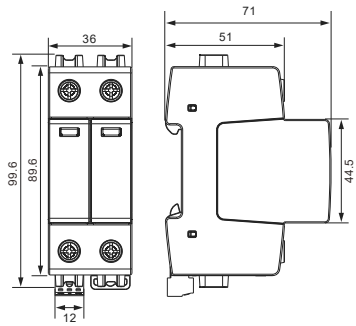

[mm]

Complete Unit	
SLP30-DCxxx/2(S)	65
DIN 43880 Dimension	1 CTN
Packaging Dimensions (H x W x L)	[260 × 220 × 330 mm]
Standard Order Quantity	48 Units

Spare Plug

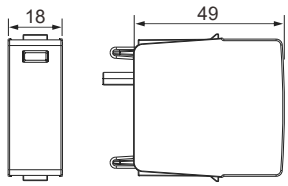

Single Unit	
SLP30-DCxxx/0	65
DIN 43880 Dimension	1 CTN
Packaging Dimensions (H x W x L)	[260 × 220 × 330 mm]
Standard Order Quantity	120 Units

Connection Diagram

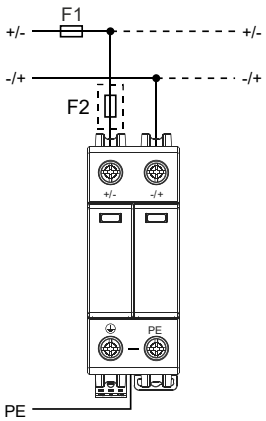

DC Surge Protective Device

SLP20-DCxxx/2(S)

Class II • Type 2

Location of Use: String box, Inverter
Network Systems: (DC+/-)-PE, (DC-/+)-PE
Surge Ratings: I_n = 10 kA (8/20 µs)
I_{total} = 20 kA (8/20 µs)
IEC/EN Category: Class II / Type 2
Protective Elements: High Energy MOV
Housing: Pluggable Design
Compliance: IEC/EN 61643-41

Technical Data

SLP20-DCxxx/2(S)		24	38
IEC Electrical			
Rated Operational DC Voltage	U_o / U_n	12 Vdc	24 Vdc
Maximum Continuous Operating DC Voltage (DC+)-PE, (DC-)-PE	U_{cdc}	24 Vdc	38 Vdc
Nominal Discharge Current (8/20 µs)	I_n	10 kA	
Total Discharge Current (8/20 µs)	I_{total}	20 kA	
Maximum Discharge Current (8/20 µs)	I_{max}	20 kA	
Voltage Protection Level (DC+)-PE, (DC-)-PE	U_p	250 V	
Residual Current at U_{cdc}	I_{PE}	< 0.5 mA	
Response Time	t_A	< 25 ns	
Number of Ports		1	
Mechanical & Environmental			
Operating Temperature Range	T_a	-40 ºF to +158 ºF [-40 ºC to +70 ºC]	
Permissible Operating Humidity	RH	5% to 95%	
Atmospheric Pressure and Altitude		80 kPa to 106 kPa / -500 m to 2000 m	
Terminal Screw Torque	M_{max}	39.9 lbf·in [4.5 Nm]	
Conductor Cross Section (max.)		2 AWG (Solid, Stranded) / 4 AWG (Flexible)	
		35 mm² (Solid, Stranded) / 25 mm² (Flexible)	
Mounting		35 mm DIN Rail, EN 60715	
Degree of Protection		IP20 (built-in)	
Housing Material		Thermoplastic: Extinguishing Degree UL 94 V-0	
Thermal Protection		Yes	
Operating State / Fault Indication		Green ok / Red defect	
Remote Contacts (RC)		Optional	
RC Switching Capacity		AC: 250 V / 0.5 A; DC: 250 V / 0.1 A; 125 V / 0.2 A; 75 V / 0.5 A	
RC Conductor Cross Section (max.)		16 AWG (Solid) / 1.5 mm² (Solid)	

Order Information		
Ordering Code	24	38
SLP20-DCxxx/2	2002421	2003821
SLP20-DCxxx/2S (with remote contacts)	2002422	2003822
SLP20-DCxxx/0 (spare modules)	2002402	2003802

SLP20-DCxxx/2(S)

Internal Configuration

Legend

- ⏚ PE/G Conductor Terminal
- S Signalling Contacts Optional

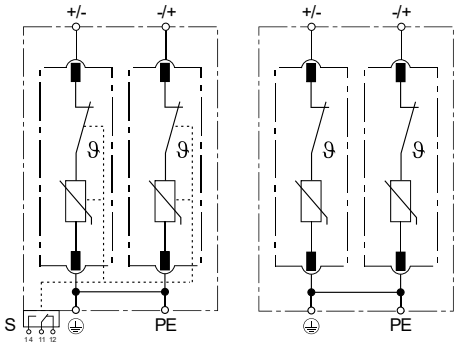

Dimensions & Packaging

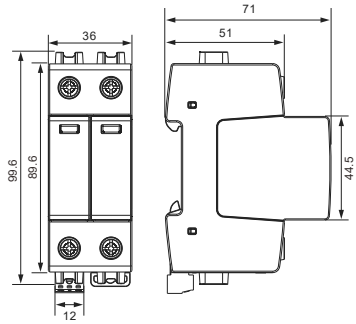

[mm]

Complete Unit		
SLP20-DCxxx/2(S)	24	38
DIN 43880 Dimension	1 CTN	
Packaging Dimensions (H x W x L)	[260 × 220 × 330 mm]	
Standard Order Quantity	48 Units	

Spare Plug

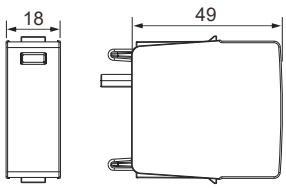

Single Unit		
SLP20-DCxxx/0	24	38
DIN 43880 Dimension	1 CTN	
Packaging Dimensions (H x W x L)	[260 × 220 × 330 mm]	
Standard Order Quantity	120 Units	

Connection Diagram

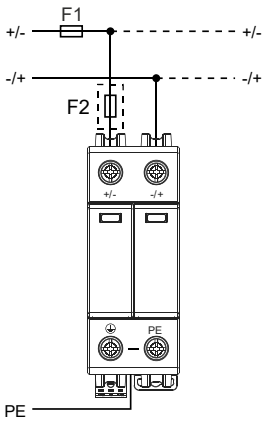

DC Surge Protective Device

SLP-DCxxx/2(S)

Class II • Type 2

Location of Use: String box, Inverter
Network Systems: (DC+/-)-PE, (DC-/+)-PE
Surge Ratings: I_n = From 1 kA to 2 kA (8/20 µs)
I_{max} = From 2 kA to 6 kA (8/20 µs)
IEC/EN Category: Class II / Type 2
Protective Elements: High Energy MOV
Housing: Pluggable Design
Compliance: IEC/EN 61643-41

Technical Data

SLP-DCxxx/2(S)		12	24	48	75	95	110	130
IEC Electrical								
Rated Operational DC Voltage	U_o / U_n	12 Vdc	24 Vdc	48 Vdc	75 Vdc	95 Vdc	110 Vdc	130 Vdc
Maximum Continuous Operating DC Voltage (DC+)-PE, (DC-)-PE	U_{cdc}	15 Vdc	30 Vdc	56 Vdc	85 Vdc	110 Vdc	125 Vdc	150 Vdc
Nominal Discharge Current (8/20 µs)	I_n	1 kA	1 kA	2 kA	2 kA	2 kA	2 kA	2 kA
Total Discharge Current (8/20 µs)	I_{total}	2 kA	2 kA	4 kA	4 kA	4 kA	4 kA	4 kA
Maximum Discharge Current (8/20 µs)	I_{max}	2 kA	2 kA	6 kA	6 kA	6 kA	6 kA	6 kA
Voltage Protection Level (DC+)-PE, (DC-)-PE	U_p	85 V	105 V	180 V	250 V	300 V	350 V	400 V
Residual Current at U_{cdc}	I_{PE}	< 0.5 mA						
Response Time	t_A	< 25 ns						
Number of Ports		1						
Mechanical & Environmental								
Operating Temperature Range	T_a	-40 ºF to +158 ºF [-40 ºC to +70 ºC]						
Permissible Operating Humidity	RH	5% to 95%						
Atmospheric Pressure and Altitude		80 kPa to 106 kPa / -500 m to 2000 m						
Terminal Screw Torque	M_{max}	39.9 lbf·in [4.5 Nm]						
Conductor Cross Section (max.)		2 AWG (Solid, Stranded) / 4 AWG (Flexible)						
		35 mm² (Solid, Stranded) / 25 mm² (Flexible)						
Mounting		35 mm DIN Rail, EN 60715						
Degree of Protection		IP20 (built-in)						
Housing Material		Thermoplastic: Extinguishing Degree UL 94 V-0						
Thermal Protection		Yes						
Operating State / Fault Indication		Green ok / Red defect						
Remote Contacts (RC)		Optional						
RC Switching Capacity		AC: 250 V / 0.5 A; DC: 250 V / 0.1 A; 125 V / 0.2 A; 75 V / 0.5 A						
RC Conductor Cross Section (max.)		16 AWG (Solid) / 1.5 mm² (Solid)						
Order Information								
Ordering Code		12	24	48	75	95	110	130
SLP-DCxxx/2		0201221	0202421	0604821	0607521	0609521	0611021	0613021
SLP-DCxxx/2S (with remote contacts)		0201222	0202422	0604822	0604822	0609522	0611022	0613022
SLP-DCxxx/0 (spare modules)		0201201	0202401	0604801	0604801	0609501	0611001	0631001

Internal Configuration

Legend

- ⏚ PE/G Conductor Terminal
- S Signalling Contacts Optional

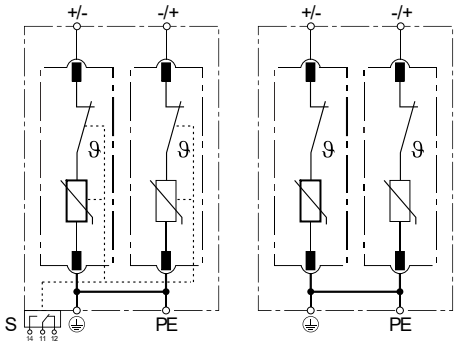

Dimensions & Packaging

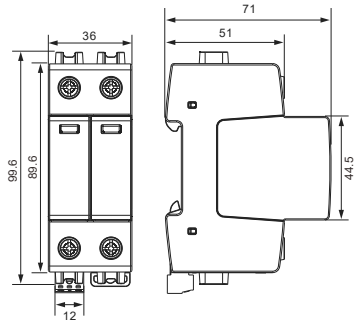

[mm]

Complete Unit							
SLP-DCxxx/2(S)	12	24	48	75	95	110	130
DIN 43880 Dimension	1 CTN						
Packaging Dimensions (H x W x L)	[260 × 220 × 330 mm]						
Standard Order Quantity	48 Units						

Spare Plug

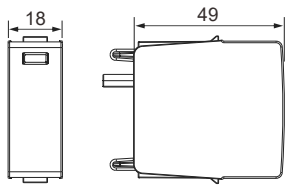

Single Unit							
SLP-DCxxx/0	12	24	48	75	95	110	130
DIN 43880 Dimension	1 CTN						
Packaging Dimensions (H x W x L)	[260 × 220 × 330 mm]						
Standard Order Quantity	120 Units						

Connection Diagram

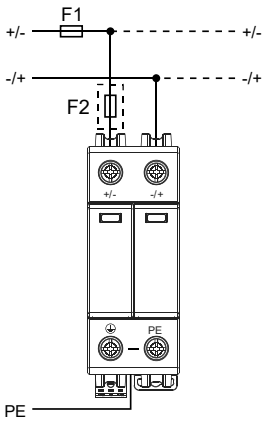

PV Surge Protective Device

FLP-PVxxxG/(S)

Class I • Class II • Type 1 • Type 2

Location of Use: String box, Inverter
Network Systems: (DC+)-PE, (DC-)-PE
Surge Ratings: I_{total} = 12.5 kA (10/350 µs)
I_{total} = 40 kA (8/20 µs)
IEC/EN Category: Class I+II / Type 1+2
Protective Elements: High Energy MOV
Housing: Monoblock Design
Compliance: IEC 61643-31:2018
EN 61643-31:2019

Technical Data

FLP-PVxxxG/(S)			1000	1500
IEC Electrical				
Maximum Continuous Operating DC Voltage	(DC+)-PE, (DC-)-PE	U_{CPV}	725 V	1100 V
	(DC+)-(DC-)	U_{CPV}	1000 V	1500 V
Nominal Discharge Current (8/20 µs)		I_n	20 kA	
Impulse Discharge Current (10/350 µs)		I_{imp}	6.25 kA	
Specific energy [(DC+)-PE / (DC-)-PE]		W/R	9.76 kJ/Ω	
Total Discharge Current (10/350 µs)		I_{total}	12.5 kA	
Specific energy [(DC+) / (DC-)-PE]		I	39.06 kJ/Ω	
Total Discharge Current (8/20 µs)		I_{total}	40 kA	
Maximum Discharge Current (8/20 µs)		I_{max}	40 kA	
Voltage Protection Level	(DC+)-PE, (DC-)-PE	U_p	2.5 kV	3.75 kV
	(DC+)-(DC-)	U_p	4.75 kV	7.25 kV
Residual Current at U_c		I_{PE}	none	
Response Time		t_A	< 25 ns	
Short-Circuit Current Rating		I_{SCPV}	2000 A	
Number of Ports			1	
Mechanical & Environmental				
Operating Temperature Range		T_a	-40 ºF to +158 ºF [-40 ºC to +70 ºC]	
Permissible Operating Humidity		RH	5% to 95%	
Atmospheric Pressure and Altitude			80 kPa to 106 kPa / -500 m to 2000 m	
Terminal Screw Torque		M_{max}	39.9 lbf·in [4.5 Nm]	
Conductor Cross Section (max.)			2 AWG (Solid, Stranded) / 4 AWG (Flexible)	
			35 mm² (Solid, Stranded) / 25 mm² (Flexible)	
Mounting			35 mm DIN Rail, EN 60715	
Degree of Protection			IP20 (built-in)	
Housing Material			Thermoplastic: Extinguishing Degree UL 94 V-0	
Thermal Protection			Yes	
Operating State / Fault Indication			Green ok / Red defect	
Remote Contacts (RC)			Optional	
RC Switching Capacity			AC: 250 V / 0.5 A; DC: 250 V / 0.1 A; 125 V / 0.2 A; 75 V / 0.5 A	
RC Conductor Cross Section (max.)			16 AWG (Solid) / 1.5 mm² (Solid)	
Order Information				
Ordering Code			1000	1500
FLP-PVxxxG			0710237	0715233
FLP-PVxxxG/(S) (with remote contacts)			0710238	0715234

Internal Configuration

Legend

- ⏚ PE/G Conductor Terminal
- S Signalling Contacts Optional

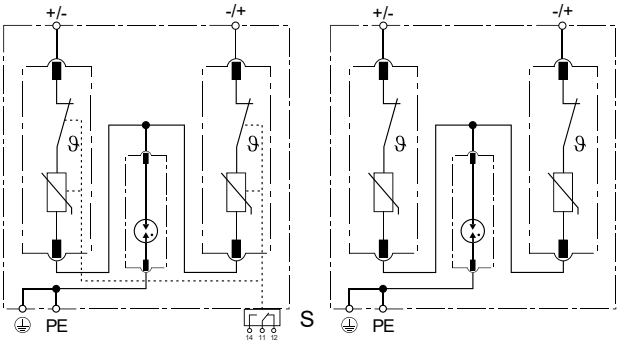

Dimensions & Packaging

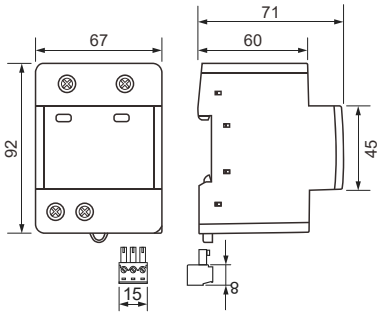

[mm]

Complete Unit		
FLP-PVxxxG/(S)	1000	1500
DIN 43880 Dimension	1 CTN	
Packaging Dimensions (H x W x L)	[210 × 220 × 330 mm]	
Standard Order Quantity	16 Units	

Connection Diagram

FLP-PVxxxG/(S)

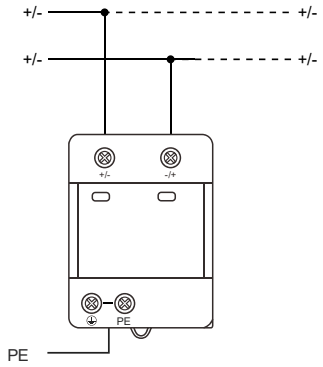

PV Surge Protective Device

FLP-PVxxx/(S)

Class I • Class II • Type 1 • Type 2

Location of Use:	String box, Inverter
Network Systems:	(DC+)-PE, (DC-)-PE
Surge Ratings:	I_{total} = 12.5 kA (10/350 µs)
	I_{total} = 40 kA (8/20 µs)
IEC/EN Category:	Class I+II / Type 1+2
Protective Elements:	High Energy MOV
Housing:	Pluggable Design
Compliance:	IEC 61643-31:2018
	EN 61643-31:2019

Technical Data

FLP-PVxxx/(S)			600	1000	1200	1500
IEC Electrical						
Maximum Continuous Operating DC Voltage	(DC+)-PE, (DC-)-PE	U_{CPV}	600 V	1000 V	1200 V	1500 V
	(DC+)-(DC-)	U_{CPV}	-	1000 V	1200 V	1500 V
Nominal Discharge Current (8/20 µs)		I_n	20 kA			
Impulse Discharge Current (10/350 µs)		I_{imp}	6.25 kA			
Total Discharge Current (10/350 µs)		I_{total}	12.5 kA			
Total Discharge Current (8/20 µs)		I_{total}	40 kA			
Maximum Discharge Current (8/20 µs)		I_{max}	40 kA			
Voltage Protection Level	(DC+)-PE, (DC-)-PE	U_p	2.2 kV	4 kV	4.4 kV	5.2 kV
	(DC+)-(DC-)	U_p	-	4 kV	4.4 kV	5.2 kV
Residual Current at U_c		I_{PE}	< 0.5 mA			
Response Time		t_A	< 25 ns			
Short-Circuit Current Rating		I_{SCPV}	10 kA			
Number of Ports			1			
Mechanical & Environmental						
Operating Temperature Range		T_a	-40 ºF to +158 ºF [-40 ºC to +70 ºC]			
Permissible Operating Humidity		RH	5% to 95%			
Atmospheric Pressure and Altitude			80 kPa to 106 kPa / -500 m to 2000 m			
Terminal Screw Torque		M_{max}	39.9 lbf·in [4.5 Nm]			
Conductor Cross Section (max.)			2 AWG (Solid, Stranded) / 4 AWG (Flexible)			
			35 mm² (Solid, Stranded) / 25 mm² (Flexible)			
Mounting			35 mm DIN Rail, EN 60715			
Degree of Protection			IP20 (built-in)			
Housing Material			Thermoplastic: Extinguishing Degree UL 94 V-0			
Thermal Protection			Yes			
Operating State / Fault Indication			Green ok / Red defect			
Remote Contacts (RC)			Optional			
RC Switching Capacity			AC: 250 V / 0.5 A; DC: 250 V / 0.1 A; 125 V / 0.2 A; 75 V / 0.5 A			
RC Conductor Cross Section (max.)			16 AWG (Solid) / 1.5 mm² (Solid)			
Order Information						
Ordering Code			600	1000	1200	1500
FLP-PVxxx			0760025	0710235	0712231	0715231
FLP-PVxxx/(S) (with remote contacts)			0760026	0710236	0712232	0715232
FLP-PVxxx/0 (spare modules)			0760002	0710202	0712202	0715202

Internal Configuration

Legend

- ⏚ PE/G Conductor Terminal
- S Signalling Contacts Optional

FLP-PV1000/(S), FLP-PV1200/(S), FLP-PV1500/(S)

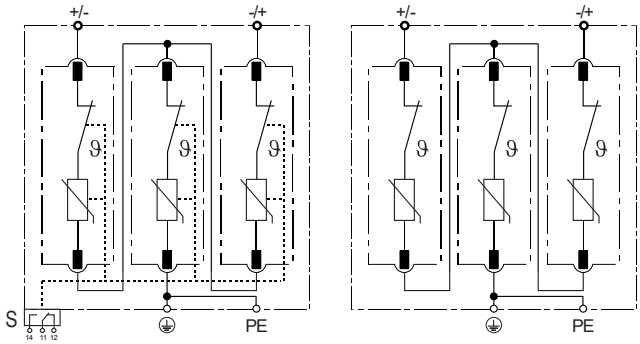

FLP-PV600/(S)

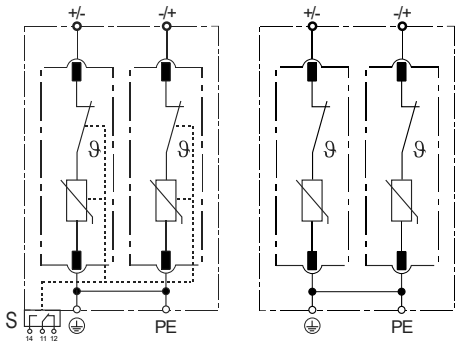

Dimensions & Packaging

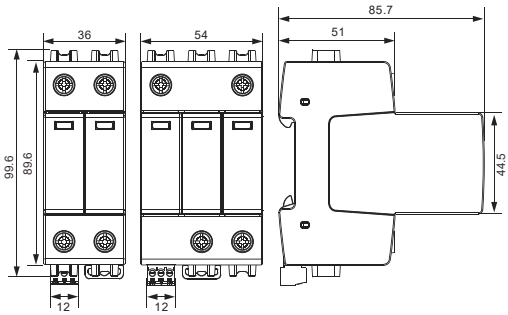

FLP-PV600/(S) FLP-PV1000/(S)
FLP-PV1200/(S)
FLP-PV1500/(S)

[mm]

Complete Unit				
FLP-PVxxx/(S)	600	1000	1200	1500
DIN 43880 Dimension	1 CTN			
Packaging Dimensions (H x W x L)	[210 × 220 × 330 mm]			
Standard Order Quantity	32 Units	32 Units	32 Units	32 Units

Spare Plug

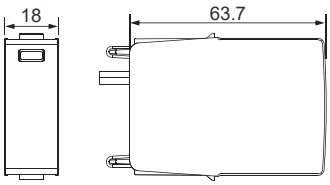

Single Unit				
FLP-PVxxx/0	600	1000	1200	1500
DIN 43880 Dimension	1 CTN			
Packaging Dimensions (H x W x L)	[210 × 220 × 330 mm]			
Standard Order Quantity	120 Units			

DC Surge Protective Device

SLP-PVxxx/(S)

Class II • Type 2

Location of Use: String box, Inverter
Mode of Protection: (DC+)-PE, (DC-)-PE
Surge Ratings: I_n = 20 kA (8/20 µs)
I_{max} = 40 kA (8/20 µs)
IEC/EN Category: Class II / Type 2
Protective Elements: High Energy MOV
Housing: Pluggable Design
Compliance: IEC 61643-31:2018
EN 61643-31:2019

Technical Data

SLP-PVxxx/(S)			600	1000	1200	1500
IEC Electrical						
Maximum Continuous Operating DC Voltage	(DC+)-PE, (DC-)-PE	U_{CPV}	600 V	1000 V	1200 V	1500 V
	(DC+)-(DC-)	U_{CPV}	-	1000 V	1200 V	1500 V
Nominal Discharge Current (8/20 µs)		I_n	20 kA			
Total Discharge Current (8/20 µs)		I_{total}	40 kA			
Maximum Discharge Current (8/20 µs)		I_{max}	40 kA			
Voltage Protection Level	(DC+)-PE, (DC-)-PE	U_p	2.2 kV	4 kV	4.4 kV	5.2 kV
	(DC+)-(DC-)	U_p	-	4 kV	4.4 kV	5.2 kV
Residual Current at U_c		I_{PE}	< 0.5 mA			
Response Time		t_A	< 25 ns			
Short-Circuit Current Rating		I_{SCPV}	1 kA			
Number of Ports			1			
Mechanical & Environmental						
Operating Temperature Range		T_a	-40 ºF to +158 ºF [-40 ºC to +70 ºC]			
Permissible Operating Humidity		RH	5% to 95%			
Atmospheric Pressure and Altitude			80 kPa to 106 kPa / -500 m to 2000 m			
Terminal Screw Torque		M_{max}	39.9 lbf·in [4.5 Nm]			
Conductor Cross Section (max.)			2 AWG (Solid, Stranded) / 4 AWG (Flexible)			
			35 mm² (Solid, Stranded) / 25 mm² (Flexible)			
Mounting			35 mm DIN Rail, EN 60715			
Degree of Protection			IP20 (built-in)			
Housing Material			Thermoplastic: Extinguishing Degree UL 94 V-0			
Thermal Protection			Yes			
Operating State / Fault Indication			Green ok / Red defect			
Remote Contacts (RC)			Optional			
RC Switching Capacity			AC: 250 V / 0.5 A; DC: 250 V / 0.1 A; 125 V / 0.2 A; 75 V / 0.5 A			
RC Conductor Cross Section (max.)			16 AWG (Solid) / 1.5 mm² (Solid)			
Order Information						
Ordering Code			600	1000	1200	1500
SLP-PVxxx			4060025	4010235	4012231	4015231
SLP-PVxxx/(S) (with remote contacts)			4060026	4010236	4012232	4015232
SLP-PVxxx/0 (spare modules)			4060002	4010202	4012202	4015202

Internal Configuration

Legend

- ⏚ PE/G Conductor Terminal
- S Signalling Contacts Optional

SLP-PV1000/(S), SLP-PV1200/(S), SLP-PV1500/(S)

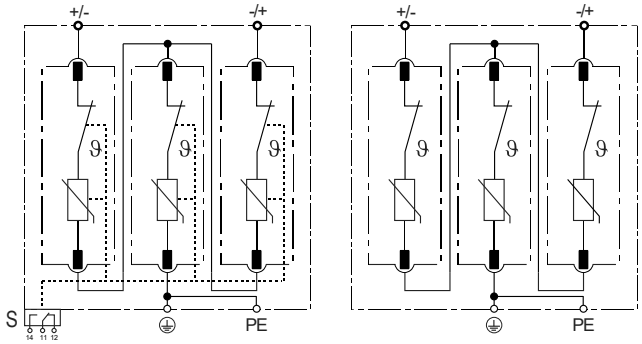

SLP-PV600/(S)

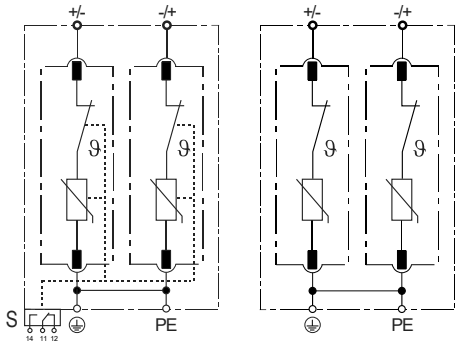

Dimensions & Packaging

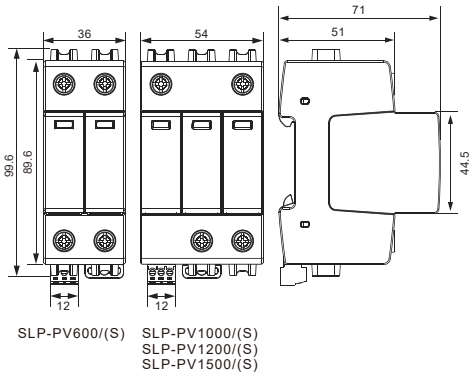

[mm]

Complete Unit				
SLP-PVxxx/(S)	600	1000	1200	1500
DIN 43880 Dimension	1 CTN			
Packaging Dimensions (H x W x L)	[260 × 220 × 330 mm]			
Standard Order Quantity	48 Units	30 Units	30 Units	30 Units

Spare Plug

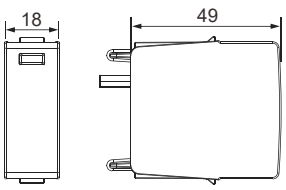

Single Unit				
SLP-PVxxx/0	600	1000	1200	1500
DIN 43880 Dimension	1 CTN			
Packaging Dimensions (H x W x L)	[260 × 220 × 330 mm]			
Standard Order Quantity	120 Units			

Wind Turbines Surge Protector

FLP25-760/3(S)

Class I • Class II • Type 1 • Type 2

Location of Use: Main Distribution Boards
Network Systems: TN-C
Mode of Protection: L-PEN
Surge Ratings: I_{imp} = 25 kA (10/350 µs)
I_n = 35 kA (8/20 µs)
IEC/EN Category: Class I+II / Type 1+2
Protective Elements: High Energy MOV
Housing: Monoblock Design
Compliance: IEC 61643-11:2011
EN 61643-11:2012

Technical Data

FLP25-760/3(S)

IEC Electrical		
Nominal AC Voltage (50/60 Hz)	U_o / U_n	690 V
Maximum Continuous Operating Voltage (AC)	U_C	760 V
Nominal Discharge Current (8/20 µs)	I_n	35 kA
Maximum Discharge Current (8/20 µs)	I_{max}	70 kA
Impulse Discharge Current (10/350 µs)	I_{imp}	25 kA
Specific Energy	W/R	156 kJ/Ω
Residual Voltage [25kA (8/20µs)]	U_p	2.5 kV
Residual Voltage [5kA (8/20µs)]	U_p	1.6 kV
Response Time	t_A	< 25 ns
Max. Backup Fuse		315 A gL / gG
Short-Circuit Current Rating (AC)	I_{SCCR}	50 kA
TOV Withstand 5 s	U_T	1000 Vac withstand
TOV 120 min	U_T	1325 Vac disconnection
Number of Ports		1
Mechanical & Environmental		
Operating Temperature Range	T_a	-40 ºF to +158 ºF [-40 ºC to +70 ºC]
Permissible Operating Humidity	RH	5% to 95%
Atmospheric Pressure and Altitude		80 kPa to 106 kPa / -500 m to 2000 m
Terminal Screw Torque	M_{max}	39.9 lbf·in [4.5 Nm]
Conductor Cross Section (max.)		2 AWG (Solid, Stranded) / 4 AWG (Flexible)
		35 mm² (Solid, Stranded) / 25 mm² (Flexible)
Mounting		35 mm DIN Rail, EN 60715
Degree of Protection		IP20 (built-in)
Housing Material		Thermoplastic: Extinguishing Degree UL 94 V-0
Thermal Protection		Yes
Operating State / Fault Indication		White ok / Red defect
Remote Contacts (RC)		Optional
RC Switching Capacity		AC: 250 V / 0.5 A; DC: 250 V / 0.1 A; 125 V / 0.2 A; 75 V / 0.5 A
RC Conductor Cross Section (max.)		16 AWG (Solid) / 1.5 mm² (Solid)
Order Information		
Ordering Code		760
FLP25-760/3		2576030
FLP25-760/3S		2576031

Internal Configuration

Legend

- L Line Conductor Terminal
- N Neutral Conductor Terminal
- ⏚ PE/G Conductor Terminal
- S Signalling Contacts Optional

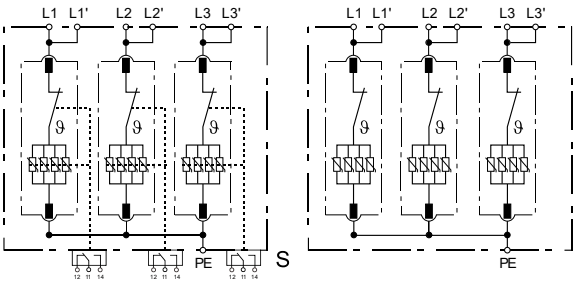

Dimensions & Packaging

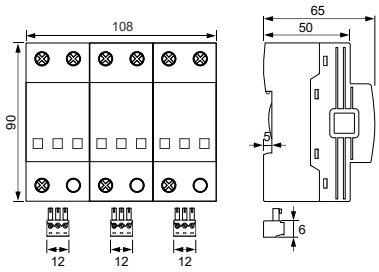

[mm]

Complete Unit	
FLP25-760/3(S)	
DIN 43880 Dimension	1 CTN
Packaging Dimensions (H x W x L)	[240 × 220 × 330 mm]
Standard Order Quantity	16 Units

Connection Diagram

TN-C (Three-phase, 3+0)

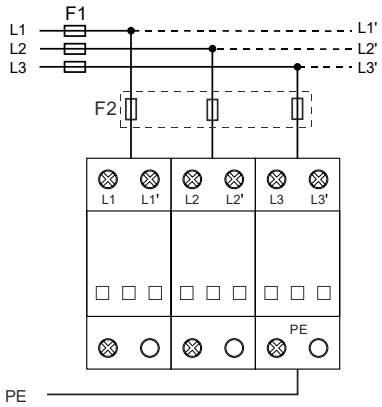

Wind Turbines Surge Protector

SLP40-760/3(S)

Class II • Type 2

Location of Use:	Sub-Distribution Boards
Network Systems:	TN-C
Mode of Protection:	L-PEN
Surge Ratings:	I_n = 20 kA (8/20 µs)
IEC/EN Category:	Class II / Type 2
Protective Elements:	High Energy MOV
Housing:	Pluggable Design
Compliance:	IEC 61643-11:2011 EN 61643-11:2012

Technical Data

SLP40-760/3(S)

IEC Electrical		
Nominal AC Voltage (50/60 Hz)	U_o / U_n	690 V
Maximum Continuous Operating Voltage (AC)	U_C	760 V
Nominal Discharge Current (8/20 µs)	I_n	20 kA
Maximum Discharge Current (8/20 µs)	I_{max}	40 kA
Residual Voltage [25kA (8/20µs)]	U_p	2.9 kV
Residual Voltage [5kA (8/20µs)]	U_p	2.6 kV
Response Time	t_A	< 25 ns
Max. Backup Fuse		125 A gL / gG
Short-Circuit Current Rating (AC)	I_{SCCR}	50 kA
TOV Withstand 5 s	U_T	1000 Vac withstand
TOV 120 min	U_T	1325 Vac disconnection
Number of Ports		1
Mechanical & Environmental		
Operating Temperature Range	T_a	-40 ºF to +158 ºF [-40 ºC to +70 ºC]
Permissible Operating Humidity	RH	5% to 95%
Atmospheric Pressure and Altitude		80 kPa to 106 kPa / -500 m to 2000 m
Terminal Screw Torque	M_{max}	39.9 lbf·in [4.5 Nm]
Conductor Cross Section (max.)		2 AWG (Solid, Stranded) / 4 AWG (Flexible)
		35 mm² (Solid, Stranded) / 25 mm² (Flexible)
Mounting		35 mm DIN Rail, EN 60715
Degree of Protection		IP20 (built-in)
Housing Material		Thermoplastic: Extinguishing Degree UL 94 V-0
Thermal Protection		Yes
Operating State / Fault Indication		Green ok / Red defect
Remote Contacts (RC)		Optional
RC Switching Capacity		AC: 250 V / 0.5 A; DC: 250 V / 0.1 A; 125 V / 0.2 A; 75 V / 0.5 A
RC Conductor Cross Section (max.)		16 AWG (Solid) / 1.5 mm² (Solid)
Order Information		
Ordering Code		760
SLP40-760/3		4076030
SLP40-760/3S		4076031

SLP40-760/3(S)

Internal Configuration

Legend

- L Line Conductor Terminal
- N Neutral Conductor Terminal
- ⏚ PE/G Conductor Terminal
- S Signalling Contacts Optional

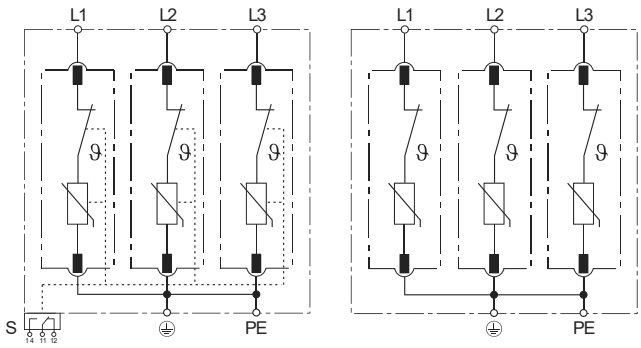

Dimensions & Packaging

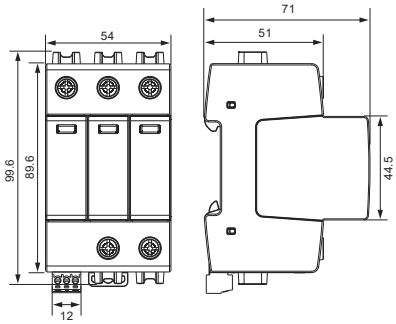

[mm]

Complete Unit	
SLP40-760/3(S)	
DIN 43880 Dimension	1 CTN
Packaging Dimensions (H x W x L)	[260 × 220 × 330 mm]
Standard Order Quantity	30 Units

Connection Diagram

TN-C (Three-phase, 3+0)

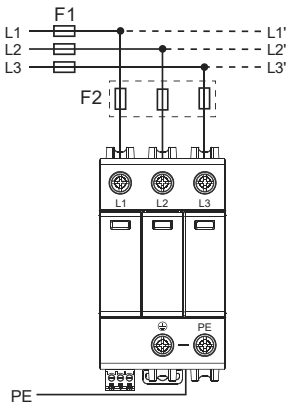

Wind Turbines Surge Protector

SLP30-1260/3(S)

Class II • Type 2

Location of Use:	Sub-Distribution Boards
Network Systems:	TN-C
Mode of Protection:	L-PEN
Surge Ratings:	I_n = 15 kA (8/20 µs)
IEC/EN Category:	Class II / Type 2
Protective Elements:	High Energy MOV
Housing:	Monoblock Design
Compliance:	IEC 61643-11:2011 EN 61643-11:2012

Technical Data

SLP30-1260/3

IEC Electrical		
Nominal AC Voltage (50/60 Hz)	U_o / U_n	1140 V
Maximum Continuous Operating Voltage (AC)	U_C	1260 V
Nominal Discharge Current (8/20 µs)	I_n	15 kA
Maximum Discharge Current (8/20 µs)	I_{max}	30 kA
Residual Voltage [25kA (8/20µs)]	U_p	4.0 kV
Residual Voltage [5kA (8/20µs)]	U_p	3.2 kV
Response Time	t_A	< 25 ns
Max. Backup Fuse		50 A gL / gG
Short-Circuit Current Rating (AC)	I_{SCCR}	25 kA
TOV Withstand 5 s	U_T	1650 Vac withstand
TOV 120 min	U_T	2200 Vac disconnection
Number of Ports		1
Mechanical & Environmental		
Operating Temperature Range	T_a	-40 ºF to +158 ºF [-40 ºC to +70 ºC]
Permissible Operating Humidity	RH	5% to 95%
Atmospheric Pressure and Altitude		80 kPa to 106 kPa / -500 m to 2000 m
Terminal Screw Torque	M_{max}	39.9 lbf·in [4.5 Nm]
Conductor Cross Section (max.)		2 AWG (Solid, Stranded) / 4 AWG (Flexible)
		35 mm² (Solid, Stranded) / 25 mm² (Flexible)
Mounting		35 mm DIN Rail, EN 60715
Degree of Protection		IP20 (built-in)
Housing Material		Thermoplastic: Extinguishing Degree UL 94 V-0
Thermal Protection		Yes
Operating State / Fault Indication		White ok / Red defect
Remote Contacts (RC)		Optional
RC Switching Capacity		AC: 250 V / 0.5 A; DC: 250 V / 0.1 A; 125 V / 0.2 A; 75 V / 0.5 A
RC Conductor Cross Section (max.)		16 AWG (Solid) / 1.5 mm² (Solid)
Order Information		
Ordering Code		1260
SLP30-1260/3		3012230
SLP30-1260/3S		3012231

Internal Configuration

Legend

- L Line Conductor Terminal
- N Neutral Conductor Terminal
- ⏚ PE/G Conductor Terminal
- S Signalling Contacts Optional

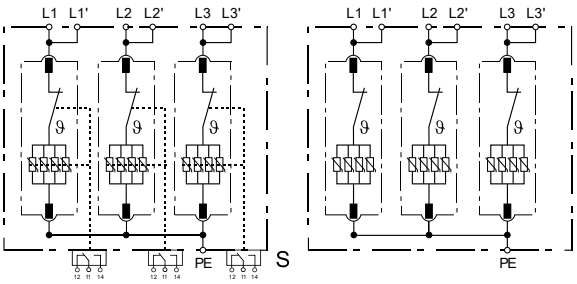

Dimensions & Packaging

[mm]

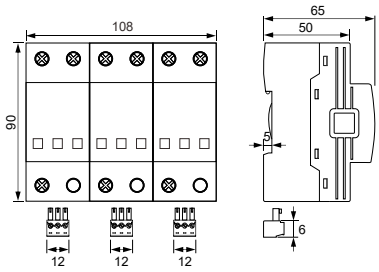

Complete Unit	
SLP30-1260/3(S)	
DIN 43880 Dimension	1 CTN
Packaging Dimensions (H x W x L)	[240 × 220 × 330 mm]
Standard Order Quantity	16 Units

Connection Diagram

TN-C (Three-phase, 3+0)

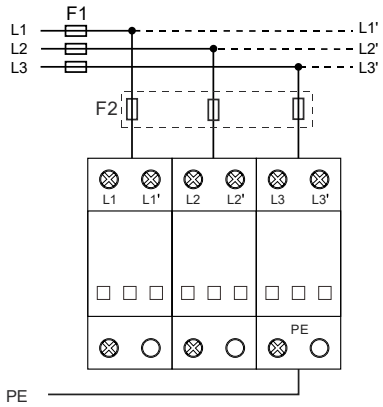

Telecom and Data Surge Protector

FRD4-xxx

D1 • C1 • C2 • C3

IEC/EN Category: D1/C1/C2/C3
Mode of Protection: Longitudinal, Transverse
Coarse Protection: 3 Terminal GDT
Voltages: 5, 12, 15, 24, 30, 48, 60, 110 Vdc
Frequency Range: 30 MHz
Surge Discharge Ratings: I_n: 10 kA, I_{max}: 20 kA, I_{imp}: 5 kA
Series Load Current: 1 A
Enclosure: DIN 43880 2/3 TE, DIN Rail Mount
Terminals: Stranded to 4 mm²
Housing: Modular Design
Compliance: IEC/EN 61643-21

FRD4 provides the level of protection to two independent circuit pairs. A number of protection voltages are available to ensure the user is able to select the closest clamping voltage to the normal signal operation of the equipment being protected.

The plug-in module/base design facilitates replacement of a failed module without the need to remove system wiring.

If the module is unplugged from the base, the connection Lines will be disconnected.

Technical Data

FRD4-xxx		5	12	15	24	30	48	60	110
IEC Electrical									
Line Conductor Terminals Protected		2 (4 Conductors)							
Nominal Operating Voltage (DC)	U_n	5 V	12 V	15 V	24 V	30 V	48 V	60 V	110 V
Maximum Continuous Operating Voltage (DC)	U_C	6 V	15 V	18 V	28 V	33 V	52 V	64 V	170 V
Rated Load Current at 25 ºC	I_L	1 A							
C2 Nominal Discharge Current (8/20 µs)	I_n	10 kA							
Maximum Discharge Current (8/20 µs)	I_{max}	20 kA							
D1 Impulse Current (10/350 µs)	I_{imp}	5 kA							
Residual Voltage at 5 kA (8/20 µs)	U_{res}	< 22 V	< 42 V	< 48 V	< 70 V	< 80 V	< 140 V	< 160 V	< 450 V
Rated Spark Overvoltage (Line - Ground)		7-10 V	17-21 V	21-25 V	31-37 V	36-44 V	57-69 V	68-84 V	184-264 V
(Line - Line)		7-10 V	17-21 V	21-25 V	31-37 V	36-44 V	57-69 V	68-84 V	184-264 V
Response Time Overvoltage Protection	t_A	< 1 ns							
Thermal Protection		Yes							
Insulation Resistance of the Protection	R_{iso}	≥ 6 kΩ	≥ 15 kΩ	≥ 18 kΩ	≥ 28 kΩ	≥ 33 kΩ	≥ 52 kΩ	≥ 64 kΩ	≥ 170 kΩ
Serial Resistance per Path	R	1.6-2.0 Ω							
Transverse Capacitance	C	50 pF							
Cut-off Frequency	f_G	30 MHz							
Mechanical									
Temperature Range		-40 ºF to +158 ºF [-40 ºC to +70 ºC]							
Terminal Cross Section Multi-Strand (max.)		12 AWG [4 mm², 2.5 mm² Q Version]							
Terminal Screw Torque		4.5 lbf·in [0.5 Nm]							
Degree of Protection IEC/EN 60529		IP20 (built-in)							
Housing Material		Thermoplastic: Extinguishing Degree V-0							
Mounting IEC/EN 60715		35 mm DIN Rail							
Order Information									
Ordering Code		5	12	15	24	30	48	60	110
FRD4-xxx		0500051	0500121	0500151	0500241	0500301	0500481	0500601	0501101

Internal Configuration

Legend

- DB Diode Block
- GDT Gas Discharge Tube
- PG Protective Grounding
- R Resistor
- TC Thermo-clip

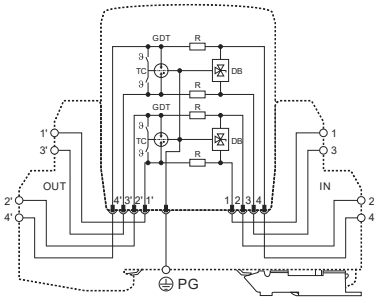

Dimensions & Packaging

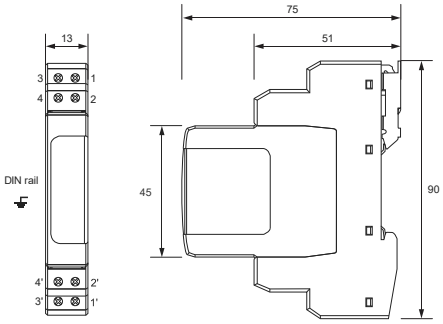

[mm]

Complete Unit								
FRD4-xxx	5	12	15	24	30	48	60	110
DIN 43880 Dimension	1 CTN							
Packaging Dimensions (H x W x L)	[260 × 220 × 330 mm]							
Standards Order Quantity	78 Units							

Telecom and Data Surge Protector

FRD2-xxx

D1 • C1 • C2 • C3

IEC/EN Category:	D1/C1/C2/C3
Mode of Protection:	Longitudinal, Transverse
Coarse Protection:	3 Terminal GDT
Voltages:	5, 12, 15, 24, 30, 48, 60, 110 Vdc
Frequency Range:	30 MHz
Surge Discharge Ratings:	I_n: 10 kA, I_{max}: 20 kA, I_{imp}: 2.5 kA
Series Load Current:	1 A
Enclosure:	DIN 43880 2/3 TE, DIN Rail Mount
Terminals:	Stranded to 4 mm²
Housing:	Modular Design
Compliance:	IEC/EN 61643-21

These efficient overvoltage barriers contain both coarse and fine protection stages and provide longitudinal and a transverse surge protection.

The initial protection stage comprises a three-pole gas discharge tube and is designed to divert the primary surge energy. The subsequent fine protection stage is carried out using fast bi-directional silicon avalanche diodes. Care is taken in the design of this fineprotection stage to avoid capacitive Line loading and thereby ensuring a low insertion loss and wide operating frequency range.

Series Line impedances ensure energy coordination between the coarse and a fine protection stages at all levels of the incident surge. To protect against the hazards of electric shock and fire which often results when power frequency contact occurs between power and communication Line, often called mains incursion, a thermo-clip is included on the primary protection stage to divert the power frequency current to ground.

The plug-in module/base design facilitates replacement of a failed module without the need to remove system wiring.If the module is unplugged from the base, the connection Lines will be disconnected.

Technical Data

FRD2-xxx		5	12	15	24	30	48	60	110
IEC Electrical									
Line Conductor Terminals Protected		1 (2 Conductors)							
Nominal Operating Voltage (DC)	U_n	5 V	12 V	15 V	24 V	30 V	48 V	60 V	110 V
Maximum Continuous Operating Voltage (DC)	U_C	6 V	15 V	18 V	28 V	33 V	52 V	64 V	170 V
Rated Load Current at 25 ºC	I_L	1 A							
C2 Nominal Discharge Current (8/20 µs)	I_n	10 kA							
Maximum Discharge Current (8/20 µs)	I_{max}	20 kA							
D1 Impulse Current (10/350 µs)	I_{imp}	2.5 kA							
Residual Voltage at 5 kA (8/20 µs)	U_{res}	< 22 V	< 42 V	< 48 V	< 70 V	< 80 V	< 140 V	< 160 V	< 450 V
Rated Spark Overvoltage (Line - Ground)		7-10 V	16-21 V	21-25 V	31-37 V	36-44 V	57-69 V	68-84 V	184-264 V
(Line - Line)		7-10 V	16-21 V	21-25 V	31-37 V	36-44 V	57-69 V	68-84 V	184-264 V
Response Time Overvoltage Protection	t_A	< 1 ns							
Thermal Protection		Yes							
Insulation Resistance of the Protection	R_{iso}	≥ 6 kΩ	≥ 15 kΩ	≥ 18 kΩ	≥ 28 kΩ	≥ 33 kΩ	≥ 52 kΩ	≥ 64 kΩ	≥ 170 kΩ
Serial Resistance per Path	R	1.6-2.0 Ω							
Transverse Capacitance	C	50 pF							
Cut-off Frequency	f_G	30 MHz							
Mechanical									
Temperature Range		-40 ºF to +158 ºF [-40 ºC to +70 ºC]							
Terminal Cross Section Multi-Strand (max.)		12 AWG [4 mm², 2.5 mm² Q Version]							
Terminal Screw Torque		4.5 lbf·in [0.5 Nm]							
Degree of Protection IEC/EN 60529		IP20 (built-in)							
Housing Material		Thermoplastic: Extinguishing Degree V-0							
Mounting IEC/EN 60715		35 mm DIN Rail							
Order Information									
Ordering Code		5	12	15	24	30	48	60	110
FRD2-xxx		0250051	0250121	0250151	0250241	0250301	0250481	0250601	0251101

Internal Configuration

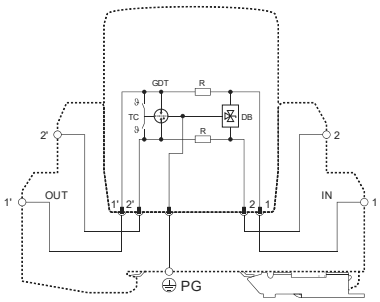

Legend

- DB Diode Block
- GDT Gas Discharge Tube
- PG Protective Grounding
- R Resistor
- TC Thermo-clip

Dimensions & Packaging

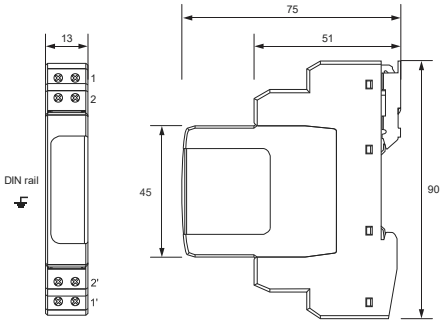

[mm]

Complete Unit								
FRD2-xxx	5	12	15	24	30	48	60	110
DIN 43880 Dimension	1 CTN							
Packaging Dimensions (H x W x L)	[260 × 220 × 330 mm]							
Standards Order Quantity	78 Units							

Telecom and Data Surge Protector

SRD2-xxx

Class I • Class II • Class III • Type 1 • Type 2 • Type 3

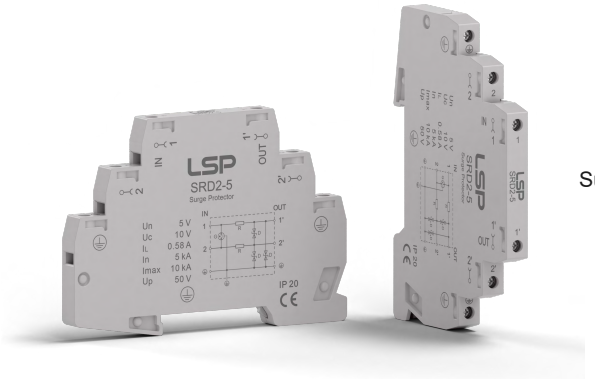

IEC/EN Category: Class I+II+III / Type 1+2+3
Mode of Protection: Longitudinal, Transverse
Voltages: 5, 12, 24 Vdc
High Frequency Range: 0 - 100 Mhz
Surge Discharge Ratings: I_n: 5 kA, I_{max}: 10 kA, I_{imp}: 1 kA
Series Load Current: 0.58 A
Enclosure: DIN 43880 2/3 TE, DIN Rail Mount
Terminals: Stranded to 2.5 mm²
Compliance: IEC/EN 61643-21

A Modular & Compact SPD for a single pair line is specifically designed to protect a single pair of electrical conductors, typically used in communication or data transmission systems.

Space-saving, modular lightning current arrester with a width of 7 mm and push-in connection technology with status indication for protecting two single lines for lightning equipotential bonding as well as indirect earthing of shielded cables.

With the capacity to effortlessly integrate into confined spaces, these devices are optimal for single-pair line installations and can be seamlessly incorporated into pre-existing systems due to their compact size. The SPD safeguards the connected devices from surge-induced damage, particularly for those within telephone lines, Ethernet cables, or other data transmission lines.

Technical Data

SRD2-xxx		5	12	24
IEC Electrical				
Lines Protected			1 (2 Conductors)	
Nominal Operating Voltage (DC)	U_n	5 V	12 V	24 V
Maximum Continuous Operating Voltage (DC)	U_C	10 V	15 V	28 V
Rated Load Current at 25 ºC	I_L		0.58 A	
C2 Nominal Discharge Current (8/20 µs)	I_n		5 kA	
Maximum Discharge Current (8/20 µs)	I_{max}		10 kA	
D1 Impulse Current (10/350 µs)	I_{imp}		1 kA	
Residual Voltage at 5 kA (8/20 µs)	U_{res}	< 42 V	50 V	65 V
Rated Spark Overvoltage (Line - Ground)		7-10 V	16-21 V	31-37 V
(Line - Line)		7-10 V	16-21 V	31-37 V
Response Time Overvoltage Protection	t_A		< 1 ns	
Thermal Protection			Yes	
Insulation Resistance of the Protection	R_{iso}	> 10 kΩ	≥ 100 kΩ	> 100 kΩ
Serial Resistance per Path	R		2.35 Ω ±5 %	
Transverse Capacitance	C		< 40 pF	
Cut-off Frequency	f_G		100.00 MHz	
Mechanical				
Temperature Range			-40 ºF to +158 ºF [-40 ºC to +70 ºC]	
Terminal Cross Section Multi-Strand (max.)			12 AWG [4 mm² , 2.5 mm² Q Version]	
Terminal Screw Torque			4.5 Ibf·in [0.5 Nm]	
Degree of Protection IEC/EN 60529			IP20 (built-in)	
Housing Material			Thermoplastic: Extinguishing Degree V-0	
Mounting IEC/EN 60715			35 mm DIN Rail	
Order Information				
Ordering Code		5	12	24
SRD2-xxx		0100051	0100121	0100241

Internal Configuration

Legend
- DB Diode Block
- GDT Gas Discharge Tube
- PG Protective Grounding
- R Resistor

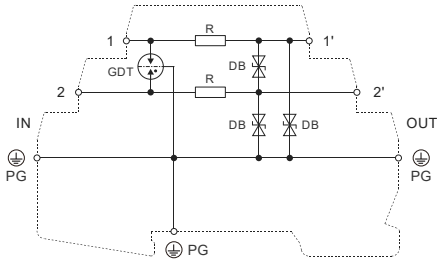

Dimensions & Packaging

[mm]

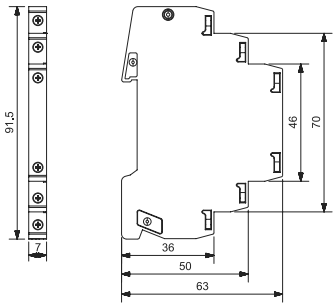

Complete Unit			
SRD2-xxx	5	12	24
DIN 43880 Dimension		1 CTN	
Packaging Dimensions (H x W x L)		[260 × 220 × 330 mm]	
Standards Order Quantity		144 Units	

PoE Surge Protector

DT-CAT 6A/EA

Class II • Type 2

- Support for Power over Ethernet + up to 1 A (PoE+ according to IEEE 802.3at)
- CAT 6A in the channel according to ANSI / TIA / EIA-568
- For installation in conformity with the lightning protection zone concept at the boundaries from 0_B-2 and higher

The PoE surge protector supports Power over Ethernet with nominal currents up to 1 A. It can be directly mounted on a DIN rail and used to establish equipotential bonding.

Alternatively, terminal protection can be implemented using a separately connectable device.

Technical Data

DT-CAT 6A/EA

IEC Electrical		
SPD according to EN 61643-21 / IEC 61643-21		Class II / Type 2
Maximum Continuous Operating Voltage (AC)	U_C	41 V
Maximum Continuous Operating Voltage (DC)	U_C	58 V
Maximum Continuous Operating Voltage (DC) Pair-Pair (PoE)	U_C	57 V
Rated Current	I_L	1 A
Impulse Durability (Line - Line)		C1: 500 V / 250 A
Nominal Discharge Current C2 (Total)		7 kA
Impulse Durability (Line - PE)		C2: 5 kV / 2.5 kA
Impulse Durability (Line - PE)		C3: 1000 V / 10 A
Impulse Durability (Line - PE)		C1: 1000 V / 500 A
Total Discharge Current (10/350)		2.5 kA
Protection Level Up C1 (Line - Line)		500 V
Protection Level Up C2 (Line - Earth)		600 V
Protection Level Up C3 (Line - Earth)		600 V
Insertion Loss at 250 MHz		< 2 dB
Capacitance Line - Line	C	< 255 pF
Capacitance Line - PG	C	< 165 pF
Range of Operating Temperatures	T_u	-40°C to +70°C
Degree of Protection		IP20
Connection (Input / Output)		RJ45 / RJ45
Pinning		1 / 2, 3 / 6, 4 / 5, 7 / 8
Enclosure Material		Aluminum housing
Earthing via		Connecting line
Transmission Class According to ISO/IEC 11801		Cat. 6
Transmission Class According to EN 50173-1		Class EA
Transmission Class According to ANSI/TIA/EIA-568		Cat. 6A in the channel
Approvals		TUV CB
Mounting		35 mm DIN Rail, EN 60715
Order Information		
Ordering Code		58
DT-CAT 6A/EA		0074158

Internal Configuration

Legend

PE/G Conductor Terminal

DB Diode Block

GDT Gas Discharge Tube

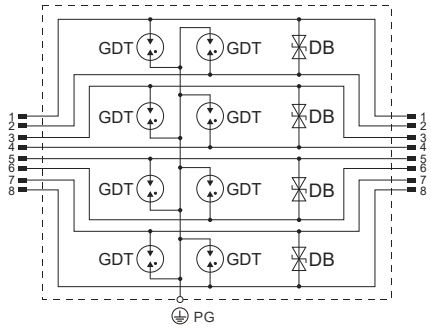

Dimensions & Packaging

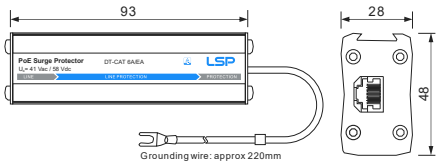

[mm]

Complete Unit	
DT-CAT 6A/EA	58 Vdc
DIN 43880 Dimensions	1 CTN
Packaging Dimensions (H x W x L)	[260 × 220 × 330 mm]
Standards Order Quantity	42 Units

PoE Surge Protector

DT-CAT6-DIN

Class II • Type 2

- Ideally suited for retrofitting, protection of all lines
- Cat. 6 in the channel (class E)
- Power over Ethernet IEEE 802.3 compliant (up to PoE++ / 4PPoE)
- For installation in conformity with the lightning protection zone concept at the boundaries from 0_B-2 and higher

DT-CAT6-DIN is a single-port industrial PoE surge protector designed for exterior complex backhaul and networking applications with an IP10 rated Zinc alloy shell.
It supports 8 lines network signals and 10/100/1000 Mbps of data rates. Ideal for 120 W (max.) PoE wires.

Either port can be PoE in or PoE out.
This model equipped standard DIN rail mounting bracket, which can easily jam into the guide rail.
The DIN rail as a ground wire to transmit the current to the earth.

Technical Data

DT-CAT6-DIN

IEC Electrical		
SPD according to EN 61643-21 / IEC 61643-21		Class II / Type 2
Nominal Voltage	U_n	48 V
Maximum Continuous Operating Voltage (DC)	U_C	60 V
Maximum Continuous Operating Voltage (AC)	U_C	34 V
Maximum Continuous Operating Voltage (DC) Pair - Pair (PoE)	U_C	57 V
Nominal Current	I_L	1 A for 2 pairs, 2 A for 4 pairs
D1 Lightning Impulse Current (10/350 µs) per Line	I_{imp}	0.5 kA
C2 Nominal Discharge Current (8/20 µs) Line - Line	I_n	150 A
C2 Nominal Discharge Current (8/20 µs) Line - PG	I_n	2.5 kA
C2 Total Nominal Discharge Current (8/20 µs)	I_n	10 kA
C2 Nominal Discharge Current (8/20 µs) Pair - Pair (PoE)	I_n	150 A
Voltage Protection Level Line - Line for I_n C2	U_P	≤ 180 V
Voltage Protection Level Line - PG for I_n C2	U_P	≤ 500 V
Voltage Protection Level Line - Line for I_n C2 (PoE)	U_P	≤ 600 V
Voltage Protection Level Line - Line at 1 kV/µs C3	U_P	≤ 180 V
Voltage Protection Level Line - PG at 1 kV/µs C3	U_P	≤ 500 V
Voltage Protection Level Pair - Pair at 1 kV/µs C3 (PoE)	U_P	≤ 600 V
Maximum Operating Power		120 W
Data Speed		10/100/1000 Mbps
Cut-Off Frequency	F_G	250 MHz
Insertion Loss at 250 MHz		≤ 3 dB
Capacitance Line - Line	C	≤ 30 pF
Capacitance Line - PG	C	≤ 25 pF
Operating Temperature Range	T_u	-40°C to +80°C
Operating Humidity		20% to 80%, non-condensation
Degree of Protection		IP10
For Mounting on		35 mm DIN rails acc. to EN 60715
Connection (Input / Output)		RJ45 / RJ45
Earthing via		DIN rail as a ground wire
Pinning		1 / 2, 3 / 6, 4 / 5, 7 / 8
Enclosure Material		Zinc alloy case
Color		Grey
Order Information		
Ordering Code		60
DT-CAT6-DIN		0104860

Internal Configuration

Legend
- ⏚ PE/G Conductor Terminal
- DB Diode Block
- GDT Gas Discharge Tube

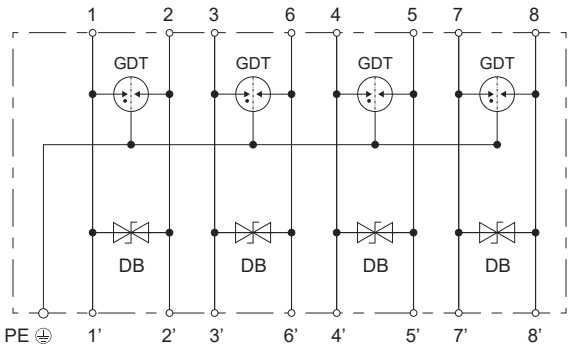

Dimensions & Packaging

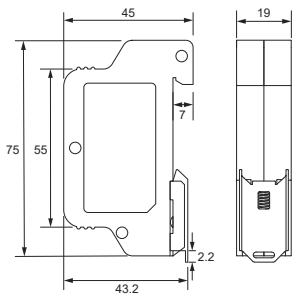

[mm]

Complete Unit	
DT-CAT6-DIN	60 Vdc
Net Weight	115 g
Packaging Dimensions (Single Unit)	[83 × 49 × 25 mm]
Packaging Dimensions (H x W x L)	[340 × 305 × 210 mm]
Standards Order Quantity	100 Units

Easy installation instructions

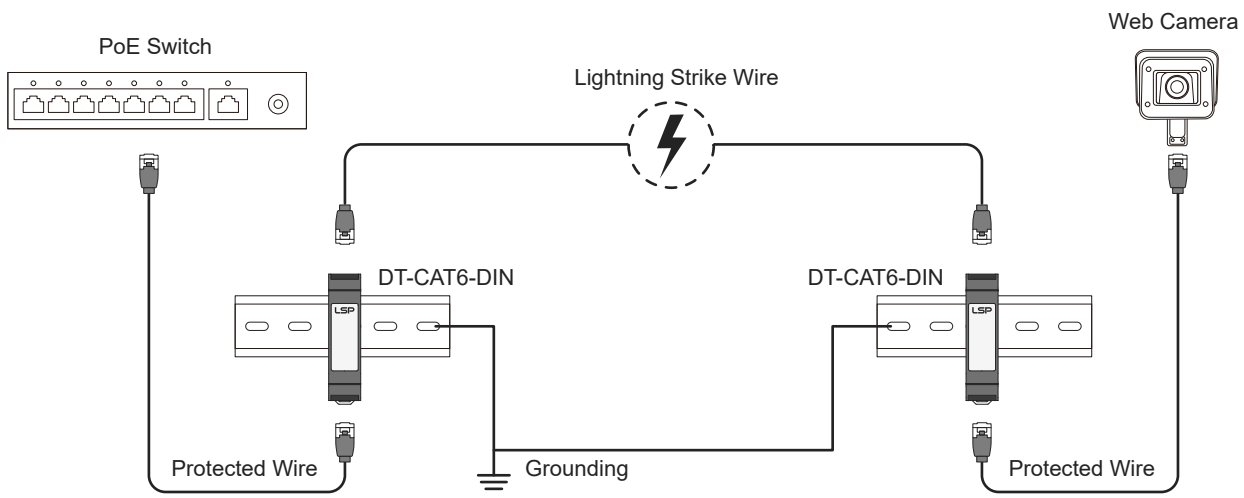

Type 2 AC Surge Protector for PCB Mounting
SLP20P-xxx
Class II • Type 2

Location of Use: For PCB Mounting
Surge Ratings: I_n = 10 kA (8/20 µs)
IEC/EN Category: Class II / Type 2
Protective Elements: High Energy MOV
Compliance: IEC 61643-11:2011
EN 61643-11:2012

Technical Data

SLP20P-xxx		75	150	275	320	385	440
IEC Electrical							
Nominal AC Voltage (50/60 Hz)	U_o / U_n	60 V	120 V	230 V	230 V	230 V	400 V
Maximum Continuous Operating Voltage (AC)	U_C	75 V	150 V	275 V	320 V	385 V	440 V
Nominal Discharge Current (8/20 µs)	I_n	10 kA					
Maximum Discharge Current (8/20 µs)	I_{max}	20 kA					
Voltage Protection Level	U_p	300 V	600 V	1200 V	1400 V	1600 V	1800 V
Response Time	t_A	< 25 ns					
Max. Backup Fuse		63 A gL / gG					
Short-Circuit Current Rating (AC)	I_{SCCR}	25 kA					
TOV Withstand 5 s	U_T	90 V	180 V	335 V	335 V	335 V	580 V
TOV 120 min	U_T	115 V	230 V	440 V	440 V	440 V	735 V
	mode	Withstand	Withstand	Safe Fail	Safe Fail	Safe Fail	Safe Fail
Mechanical & Environmental							
Operating Temperature Range	T_a	-40 °F to +158 °F [-40 °C to +70°C]					
Permissible Operating Humidity	RH	5% to 95%					
Atmospheric Pressure and Altitude		80 kPa to 106 kPa / -500 m to2000 m					
Connection to Network		Through Soldering Pins					
Mounting		On Printed Circuit Board					
Degree of Protection		IP20 (built-in)					
Housing Material		Thermoplastic: Extinguishing Degree UL 94 V-0					
Disconnection Indicator		1 Mechanical Indicator by Pole					
Operating State / Fault Indication		Green ok / Red defect					
Remote Signaling of Disconnection		Output on Changeover Contact					
Order Information							
Order Code		75	150	275	320	385	440
SLP20P-xxx		2007515	2015015	2027515	2032015	2038515	2044015

Internal Configuration

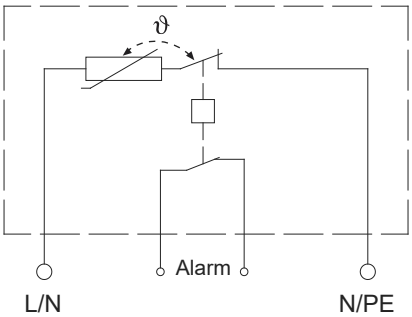

Dimensions

[mm]

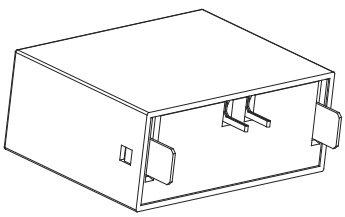

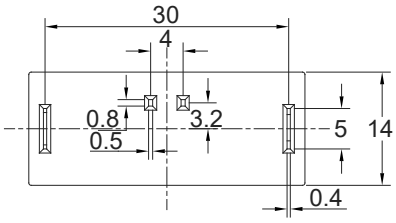

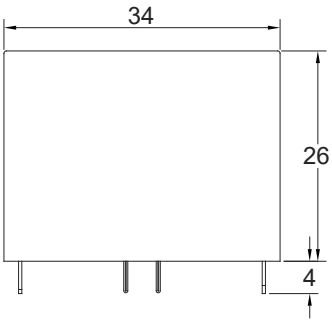

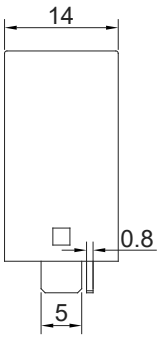

Type 2 PV Surge Protector for PCB Mounting

SLP20P-PVxxx

Class II • Type 2

Location of Use: For PCB Mounting
Surge Ratings: I_n = 10 kA (8/20 µs)
IEC/EN Category: Class II / Type 2
Protective Elements: High Energy MOV
Compliance: IEC 61643-31:2018
EN 61643-31:2019

Technical Data

SLP20P-PVxxx		75	300	500	600	750	900
IEC Electrical							
Max.PV Operating Voltage (DC)	U_{cpv}	75 V	300 V	500 V	600 V	750 V	900 V
Max. PV Operating Voltage (DC), [star mounting]	U_{cpv}	150 V	600 V	1000 V	1200 V	1500 V	1800 V
Continuous Operating Current	I_{cpv}	< 0.1 mA					
Nominal Discharge Current (8/20 µs)	I_n	10 kA					
Maximum Discharge Current (8/20 µs)	I_{max}	20 kA					
Voltage Protection Level	U_p	0.5 kV	1.1 kV	1.8 kV	2.0 kV	2.6 kV	2.8 kV
Voltage Protection Level, [star mounting]	U_p	1.0 kV	2.2 kV	3.6 kV	4.0 kV	5.2 kV	5.6 kV
Response Time	t_A	< 25 ns					
Current Withstand Short-Circuit PV	I_{SCPV}	1000A					
Mechanical & Environmental							
Operating Temperature Range	T_a	-40 °F to +158 °F [-40 °C to +70°C]					
Permissible Operating Humidity	RH	5% to 95%					
Atmospheric Pressure and Altitude		80 kPa to 106 kPa / -500 m to2000 m					
Connection to Network		Through Soldering Pins					
Mounting		On Printed Circuit Board					
Degree of Protection		IP20 (built-in)					
Housing Material		Thermoplastic: Extinguishing Degree UL 94 V-0					
Disconnection Indicator		1 Mechanical Indicator by Pole					
Operating State / Fault Indication		Green ok / Red defect					
Remote Signaling of Disconnection		Output on Changeover Contact					
Order Information							
Order Code		75	300	500	600	750	900
SLP20P-PVxxx		2007517	2030017	2050017	2060017	2075017	2090017

Internal Configuration

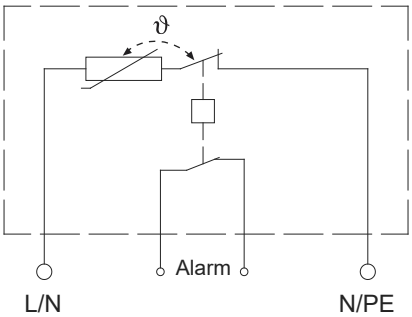

Dimensions

[mm]

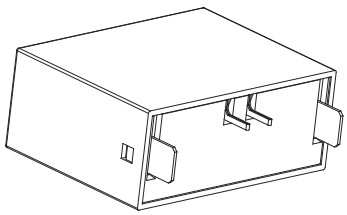

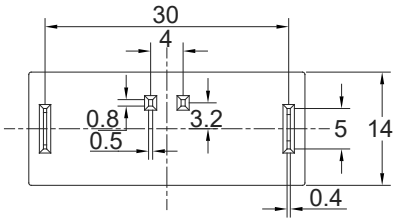

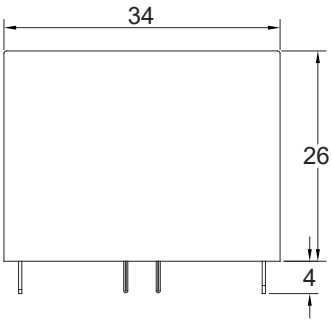

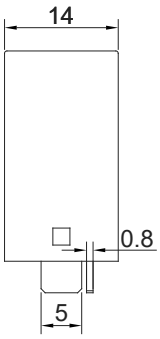

LED Surge Protection Module
SLP20-320x

Class II • Class III • Type 2 • Type 3

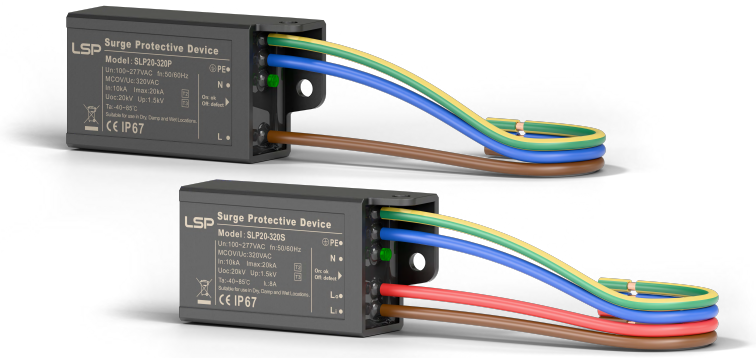

- Applicable to class I or II luminaire
- Protection mode: L-N, L-PE, N-PE
- Built in thermal separation function, higher safety
- Parallel and series connection mode optional, with its own lead
- Excellent surge impact resistance and low residual voltage
- Miniature size and convenient for embedded installation
- IP67 Water-proof and Dust-proof

SLP20-320 series thermally protected Surge Protective Device is specially designed to be used in outdoor and commercial LED lighting fixtures for transient overvoltage protection. It is mainly composed of thermally protected varistors and gas discharge tube components. Its built-in thermal disconnect function provides additional protection to prevent catastrophic failure and fire hazard even under the extreme circumstances of varistor end-of-life or sustaining over voltage conditions. The product is connected with LED power driver to provide reliable lightning surge protection, which can effectively prolong the service life and stability of luminaires.

Technical Data

SLP20-320x			SLP20-320P	SLP20-320S
IEC Electrical				
SPD according to IEC/EN 61643-11			Class II+III / Type 2+3	
Nominal Operating Voltage (50/60 Hz)		U_n	100-277 V	100-277 V
Maximum Continuous Operating Voltage (50/60 Hz)		U_C	320 V	320 V
Rated Load Current		I_L	-	8 A
Nominal Discharge Current (8/20 μs)		I_n	10 kA	10 kA
Maximum Discharge Current (8/20 μs)		I_{max}	20 kA	20 kA
Open-Circuit Voltage (1.2/50 μs & 8/20 μs)		U_{oc}	20 kV	20 kV
Voltage Protection Level (@I_n)	(L-N, L/N-PE)	U_p	≤1.5 kV	≤1.5 kV
Follow Current Extinguishing Capability	(N-PE)	I_{fi}	100 A_{rms}	100 A_{rms}
TOV Withstand Voltage 5 s	(L-N)	U_T	337 V	337 V
TOV Safe Failure 120 min	(L-N)	U_T	442 V	442 V
Mechanical & Environmental				
Operating State / Fault Indication			On normally, Off fault	
Connecting Wires			02 (RV) 1.5 mm^2	
Connection Mode			Parallel connection	
Enclosure Material			Thermoplastic UL 94 V-0	
Operating Temperature Range			-40 ºC to +85 ºC	
Degree of Protection			IP67	
Order Information				
Ordering Code			SLP20-320P	SLP20-320S
SLP20-320x			2032015	2032016

Application / Installation Schematic

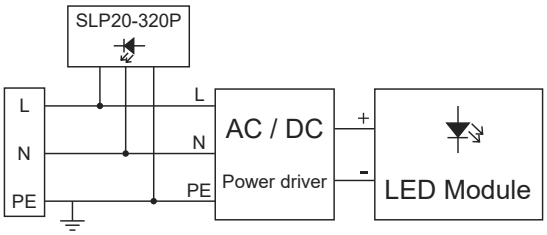

Parallel connection

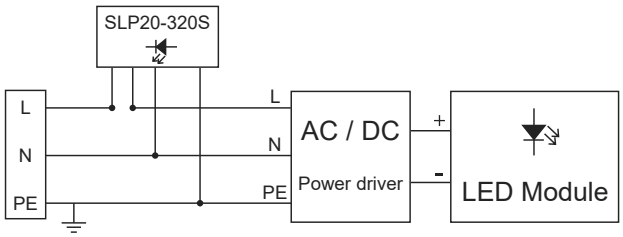

Series connection

Installation instructions:

1. SPD should be installed near the AC side of LED power driver.
2. Parallel: Brown-phase line (L); Blue-neutral line (N); Yellow & green-ground line (PE).
3. Series: Brown-phase line (L_i); Red-phase line (L_o); Blue-neutral line (N); Yellow & green-ground line (PE)
4. Fixed with one M4 screw.

Dimensions & Packaging

[mm]

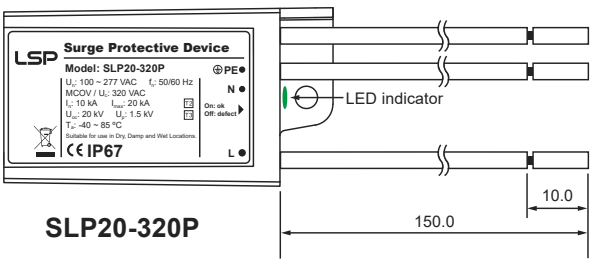

SLP20-320P

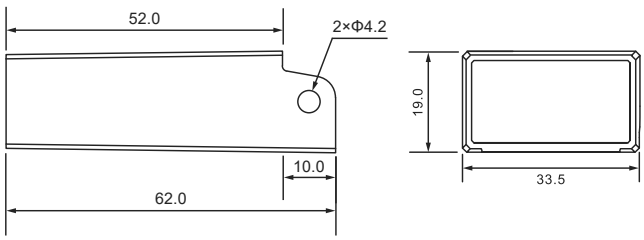

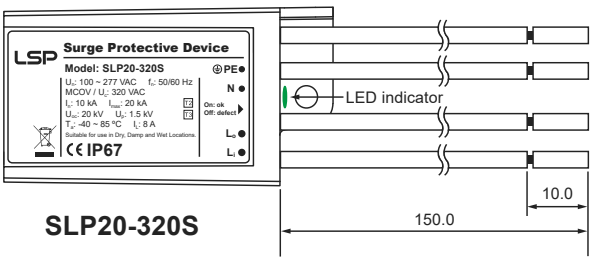

SLP20-320S

Complete Unit		
SLP20-320x	SLP20-320P	SLP20-320S
Weight (One Piece)	62 g	70 g
Packaging Dimensions (H × W × L)	[428 × 222 × 205 mm]	
Packing Quantity	200 pcs/CTN	

Repetitive Surge Capability

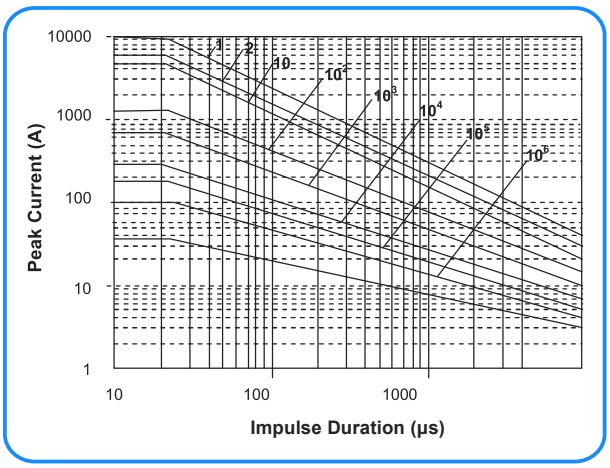

Test Waveform

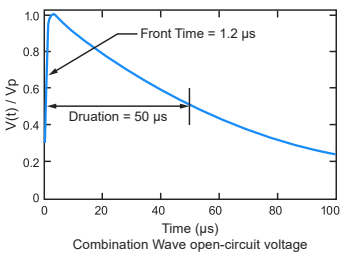

Combination Wave open-circuit voltage

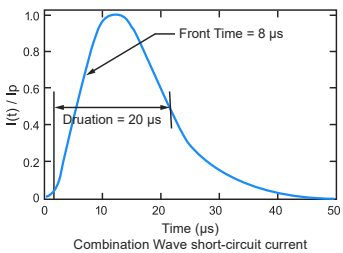

Combination Wave short-circuit current

Lightning surge test (8/20 μs)	
Surge	Strikes
20000 A	1
15000 A	2
10000 A	15

Lightning surge test (8/20 μs & 1.2/50 μs)	
Surge	Strikes
10 kA / 20 kV	120

Notes: IEC 61000-4-5 surge immunity test waveforms: 1.2/50 μs open circuit voltage and 8/20 μs short circuit current.

LED Surge Protection Module
SLP10-320x

Class II • Class III • Type 2 • Type 3

- Applicable to class I or II luminaire
- Protection mode: L-N, L-PE, N-PE
- Built in thermal separation function, higher safety
- Parallel and series connection mode optional, with its own lead
- Excellent surge impact resistance and low residual voltage
- Miniature size and convenient for embedded installation
- IP67 Water-proof and Dust-proof

SLP10-320 series thermally protected Surge Protective Device is specially designed to be used in outdoor and commercial LED lighting fixtures for transient overvoltage protection. It is mainly composed of thermally protected varistors and gas discharge tube components. Its built-in thermal disconnect function provides additional protection to prevent catastrophic failure and fire hazard even under the extreme circumstances of varistor end-of-life or sustaining over voltage conditions. The product is connected with LED power driver to provide reliable lightning surge protection, which can effectively prolong the service life and stability of luminaires.

Technical Data

SLP10-320x			SLP10-320P	SLP10-320S
IEC Electrical				
SPD according to IEC/EN 61643-11			Class II+III / Type 2+3	
Nominal Operating Voltage (50/60 Hz)		U_n	100-277 V	100-277 V
Maximum Continuous Operating Voltage (50/60 Hz)		U_C	320 V	320 V
Rated Load Current		I_L	-	8 A
Nominal Discharge Current (8/20 µs)		I_n	5 kA	5 kA
Maximum Discharge Current (8/20 µs)		I_{max}	10 kA	10 kA
Open-Circuit Voltage (1.2/50 µs & 8/20 µs)		U_{oc}	10 kV	10 kV
Voltage Protection Level (@I_n)	(L-N, L/N-PE)	U_p	≤1.2 kV	≤1.2 kV
Follow Current Extinguishing Capability	(N-PE)	I_{fi}	100 A_{rms}	100 A_{rms}
TOV Withstand Voltage 5 s	(L-N)	U_T	337 V	337 V
TOV Safe Failure 120 min	(L-N)	U_T	442 V	442 V
Mechanical & Environmental				
Operating State / Fault Indication			On normally, Off fault	
Connecting Wires			06 (RV) 1.0 mm^2	
Connection Mode			Parallel connection	
Enclosure Material			Thermoplastic UL 94 V-0	
Operating Temperature Range			-40 ºC to +85 ºC	
Degree of Protection			IP67	
Order Information				
Ordering Code			SLP10-320P	SLP10-320S
SLP10-320x			1032015	1032016

Application / Installation Schematic

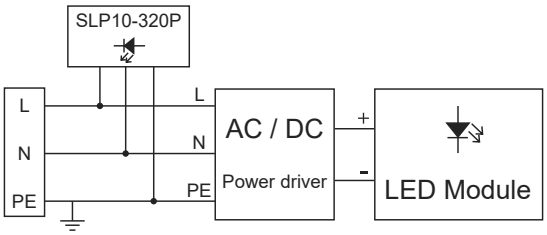

Parallel connection

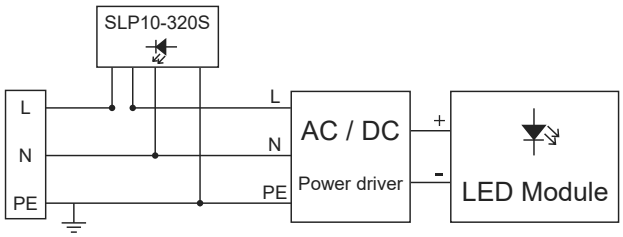

Series connection

Installation instructions:

1. SPD should be installed near the AC side of LED power driver.
2. Parallel: Brown-phase line (L); Blue-neutral line (N); Yellow & green-ground line (PE).
3. Series: Brown-phase line (L_i); Red-phase line (L_o); Blue-neutral line (N); Yellow & green-ground line (PE)
4. Fixed with one M4 screw.

Dimensions & Packaging

[mm]

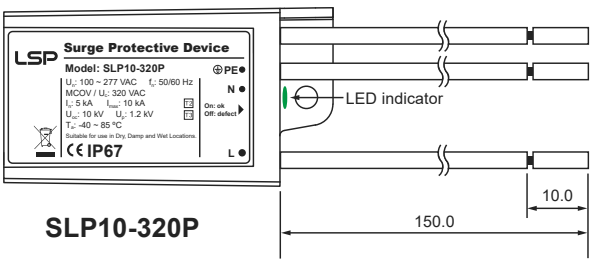

SLP10-320P

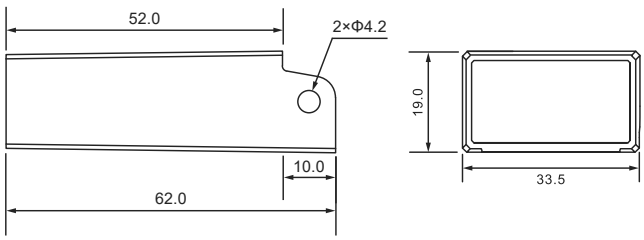

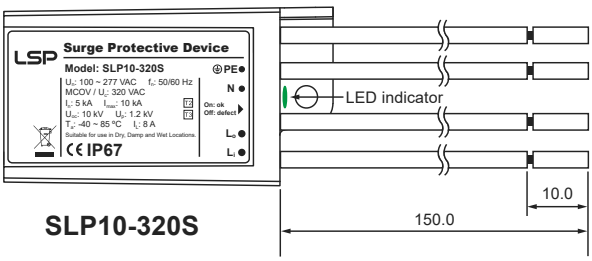

SLP10-320S

Complete Unit		
SLP10-320x	SLP10-320P	SLP10-320S
Weight (One Piece)	60 g	61 g
Packaging Dimensions (H × W × L)	[428 × 222 × 205 mm]	
Packing Quantity	200 pcs/CTN	

Repetitive Surge Capability

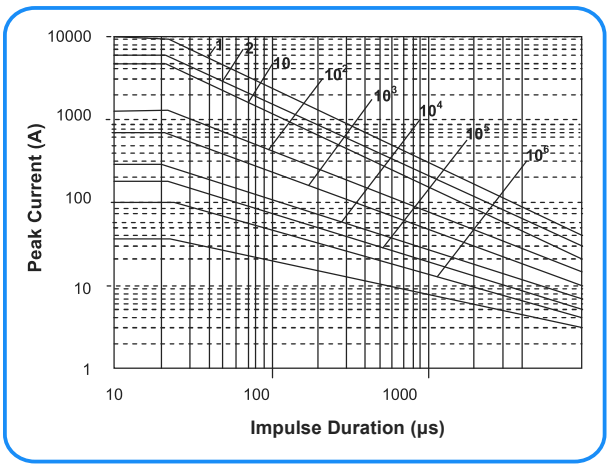

Test Waveform

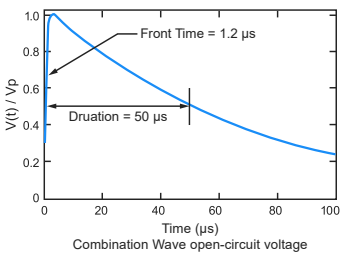

Combination Wave open-circuit voltage

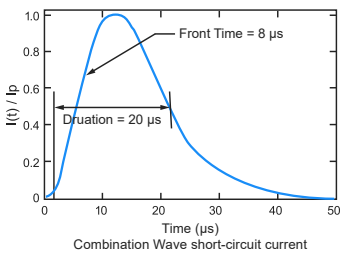

Combination Wave short-circuit current

Lightning surge test (8/20 μs)	
Surge	Strikes
10000 A	1
7000 A	2
5000 A	15

Lightning surge test (8/20 μs & 1.2/50 μs)	
Surge	Strikes
5 kA / 10 kV	120
10 kA / 20 kV	30

Notes: IEC 61000-4-5 surge immunity test waveforms: 1.2/50 μs open circuit voltage and 8/20 μs short circuit current.

Wenzhou Arrester Electric Co., Ltd.
5th FL, Bldg 2, No. 888 Liujiang Road, Liushi,
Yueqing 325604 Zhejiang, China
Phone: +86-18968826885
Website: https://lsp.global
Email: sales@lsp.global

https://lsp.global